# 抽真空和加注/人工排气 规程
# Evacuation and Filling/Repair Bleeding Instruction

| | | |
|---|---|---|
| 客户 **Customer:**<br>车辆 **Vehicles:** | 上汽通用五菱 **SGMW**<br>**M150** | |
| 系统 **System:**<br>制动回路布置类型 **Brake split:**<br>驱动型式 **Transmission type:** | **ABS 9.0**<br>**X** 型回路布置 **X brake split**<br>前轮驱动 **Front wheel drive** | |
| 设备 **Equipment:**<br>诊断协议 **Diagnosis Protocol:**<br>通讯类型 **Tester Requests Via:** | 抽真空加注设备 **Evacuate and Filling machines**<br>人工排气设备 **Repair Bleed machines**<br>**KWP2000**<br>**K** | |
| **"D"** | | |
| 分发对象 **Distribution list:** | 客户 **Customer** | |

| | Name | Signature: | Date: |
|---|---|---|---|
| Checked by: | Jiang Zhigang | | |
| Approved by: | Cheng Gang | | |



©博世保留商标和专利应用在内的所有权力，未经我公司许可不得复制或传递给第三方。

© All rights with Robert Bosch GmbH, including trademark / patent applications. Any right of disposal, as copying and distribution to third parties is ours.

# 修改记录 Modifications:

| No. | Date | Modifications: | Signature |
|---|---|---|---|
| 00 | 05.07.2012 | New Release | Wang Paul |
| | | | |

诊断文件 Diagnose Documentation

| No | BOSCH – No. | Edition | Date | Name | Vehicle |
|---|---|---|---|---|---|
| 1 | 0265T12065 | 03 | 12.06.2012 | Functional description of diagnosis<br>诊断功能描述 | M150 |

附件 Attachments

| No | BOSCH – No. | Name | Vehicle |
|---|---|---|---|
| 1 | - | 液压图 Hydraulic circuit diagrams | - |
| 2 | Y 369 B80 374 C | ABS 9 电路图 ABS 9 Wiring diagram | M150 |
| 3 | 0 265 A69 145_02 | ABS 9 模块 ABS 9 Module | M150 |



©博世保留商标和专利应用在内的所有权力，未经我公司许可不得复制或传递给第三方。

© All rights with Robert Bosch GmbH, including trademark / patent applications. Any right of disposal, as copying and distribution to third parties is ours.

## 目录 Table of Content:

**1 综述 General ..... 5**

1.1 诊断文件 Diagnose Documentation ..... 5
1.2 首字母缩写 Acronyms ..... 5

**2 应用 application ..... 6**

**3 诊断次序 Diagnostic sequence description ..... 7**

3.1 抽真空加注次序 Diagnostic sequence “Evacuation and Filling” ..... 7
3.2 人工排气次序 Diagnostic sequence “Repair Bleeding” ..... 8

**4 抽真空加注过程步骤描述 E&F Process Step Description ..... 9**

4.1 流程图 Process Diagram ..... 10
4.2 操作 Handling ..... 12
4.3 空气压力泄漏检查（可选）Air Pressure Leak Check (optional) ..... 12
4.4 抽真空循环 Evacuation Cycle ..... 13
4.5 加注循环 Fill Cycle ..... 14
4.6 加注满储液罐（清除）Top of Reservoir (Scavenging) ..... 15
4.7 结束操作 End of Cycle/ Handling ..... 15
4.8 诊断功能和启动图 Diagram of diagnostic functions and actuation’s ..... 16

**5 人工排气过程步骤描述 Repair Bleeding Process Step Description ..... 17**

5.1 操作 Handling ..... 18
5.2 排气过程描述 Bleed Process Description ..... 19
5.3 排气步骤示意图 Schematically diagnostic sequence ..... 21
5.4 加注满储液罐（清除） Top of Reservoir (Scavenging) ..... 23
5.5 结束操作 End of Cycle/ Handling ..... 24

**6 通讯指令 Communication Command ..... 25**

6.1 通用通讯指令 General Command ..... 25
6.1.1 建立扩展诊断模式 Start Extended Diagnostic Session ..... 25
6.1.2 电子控制单元识别 ECU-Identification ..... 26
6.1.3 检查系统状态 Check System Status ..... 27
6.1.4 清除故障代码 Clear DTC ..... 28
6.1.5 读取故障代码 Read Status Of DTC ..... 29
6.1.6 写入抽真空加注过程控制字节 Write E&F Process Control Byte ..... 30
6.1.7 结束扩展诊断模式 End of Extended Diagnosis Session ..... 31
6.2 抽真空加注相关通讯指令 Evacuation and fill Command ..... 32



©博世保留商标和专利应用在内的所有权力，未经我公司许可不得复制或传递给第三方。

© All rights with Robert Bosch GmbH, including trademark / patent applications. Any right of disposal, as copying and distribution to third parties is ours.

6.2.1 带电机启动的抽真空和加注指令 Evacuation and Fill Command with pump motor actuation ..... 32
6.2.2 检查抽真空加注程序执行状态(可选) Check E&F routine status(optional) ..... 34
6.3 人工排气相关通讯指令 Repair bleeding Command ..... 35
6.3.1 人工排气第一阶段指令（左后轮排气）Phase 1: Wheel RL ..... 35
6.3.2 人工排气第二阶段指令（左前轮排气）Phase 2: Wheel FL ..... 35
6.3.3 人工排气第三阶段指令（右前轮排气）Phase 3: Wheel FR ..... 35
6.3.4 人工排气第四阶段指令（右后轮排气）Phase 4: Wheel RR ..... 36
6.3.5 检查人工排气程序执行状态(可选) Check Repair Bleeding routine status(optional) ..... 37

**7 故障处理：Failure Handling: ..... 38**

7.1 抽真空加注故障 E&F Failure ..... 38
7.2 人工排气故障 Repair Bleeding Failure ..... 38

**8 阀保护措施和液压数据 Valve protective measures and hydraulic data ..... 39**

8.1 阀保护措施 Valve protective measures ..... 39
8.2 液压数据 Hydraulic data ..... 40

**9 电气数据规格 Electrical Data Specifications: ..... 41**

9.1 ABS 系统的电流消耗计算值 Information to the calculated current consumption of an ABS system ..... 41
9.2 电压规格 Specification of the voltage supply ..... 41

**10 电气连接 Electrical Adaptation: ..... 42**

10.1 抽真空加注电气连接 E&F Electrical Adaptation ..... 42
10.1.1 连接车辆的诊断口 Adaptation onto the diagnostic link of the vehicle: ..... 42
10.1.2 连接电子控制单元连接器：Adaptation onto the ECU connector: ..... 43
10.2 人工排气电气连接 Repair Bleeding Electrical Adaptation ..... 45

**11 附件 Attachments ..... 46**

11.1 ABS X 型回路液压图 ABS with X brake split circuit Hydraulic Circuit Diagrams ..... 46
11.2 M150 ABS9 电路图 M150 ABS9 Wiring Diagram ..... 47
11.3 M150 ABS9 模块 M150 ABS9 Module ..... 48



©博世保留商标和专利应用在内的所有权力，未经我公司许可不得复制或传递给第三方。

© All rights with Robert Bosch GmbH, including trademark / patent applications. Any right of disposal, as copying and distribution to third parties is ours.

# 1 综述 General

## 1.1 诊断文件 Diagnose Documentation

| No | BOSCH – No. | Edi-tion | Date | Name | Vehicle |
|---|---|---|---|---|---|
| 1 | 0265T12065 | 03 | 12.06.2012 | Functional description of diagnosis<br>诊断功能描述 | M150 ABS9 |

## 1.2 首字母缩写 Acronyms

| | |
|---|---|
| ABS | 防抱死制动系统 antilock braking system |
| ABS-SILA | 防抱死制动系统警告灯 ABS warning light |
| AV | 出液阀 outlet valve |
| AY | 加速度传感器 acceleration sensor |
| BLS | 刹车灯开关 break light switch |
| DTC | 诊断故障码 diagnostic trouble code |
| ECU | 电子控制单元 electronic control unit |
| EV | 进液阀 inlet valve |
| FA | 前轴 front axle |
| FCM | 故障码存储器 fault code memory |
| FL | 前左 front left |
| FR | 前右 front right |
| PB | 过程字节 process byte |
| RA | 后轴 rear axle |
| RFP | 循环电机泵 recirculation pump |
| RL | 后左 rear left |
| RR | 后右 rear right |
| SV | 电磁阀 solenoid valve |
| UM | 电机泵反馈 pump motor feedback |
| WSS | 轮速传感器 wheel speed sensor |



©博世保留商标和专利应用在内的所有权力，未经我公司许可不得复制或传递给第三方。

© All rights with Robert Bosch GmbH, including trademark / patent applications. Any right of disposal, as copying and distribution to third parties is ours.

## 2 应用 application

本文档包含了抽真空加注及人工排气所必须执行的程序。
该程序以 KWP2000 诊断和相应的功能为基础。客户/车辆特定的“诊断功能说明”适当的版本，提供了诊断及其使用特性的操作和功能信息。所有使用的诊断功能是只读存储器的固化功能。关于详细内容请参见“诊断功能说明”。

This document contains all customer specific information to the processes vacuum filling (evac/fill process) and repair bleeding.
The procedure is based on the KWP2000 diagnosis and the corresponding features. The appropriate version of the customer/vehicle specific “Functional description of diagnosis” provides information on the handling and function of diagnosis and which features should be used. All used diagnostic functions are ROM-resident functions. For more details looks the “Functional description of diagnosis”.



©博世保留商标和专利应用在内的所有权力，未经我公司许可不得复制或传递给第三方。

© All rights with Robert Bosch GmbH, including trademark / patent applications. Any right of disposal, as copying and distribution to third parties is ours.

# 3 诊断次序 Diagnostic sequence description

## 3.1 抽真空加注次序 Diagnostic sequence “Evacuation and Filling”

| 诊断步骤<br>**Diagnostic Step:** | 诊断功能<br>**Diagnostic function:** | 参考章节<br>**Details chapter:** |
|---|---|---|
| 01 | 建立扩展诊断模式<br>Start Extended Diagnostic Session | **6.1.1** |
| 02 | 车辆信息识别<br>ECU Identification | **6.1.2** |
| 03 | 检查系统状态（阀组与电机状态)<br>Check system status(VR & MR status) | **6.1.3** |
| 04 | 开始抽真空加注<br>Start of the Evacuation and Filling Routine | **6.2.1** |
| 05 | 检查抽真空加注程序执行情况（可选）<br>Evaluation of E&F Routine status (optional) | **6.2.2** |
| 06 | 检查系统状态（阀组与电机状态)<br>Check system status(VR & MR status) | **6.1.3** |
| 07 | 写入过程字节<br>Write Process Byte | **6.1.6** |
| 08 | 清除故障代码<br>Clear DTC | **6.1.4** |
| 09 | 结束扩展诊断模式<br>End of Extended Diagnosis Session | **6.1.7** |



©博世保留商标和专利应用在内的所有权力，未经我公司许可不得复制或传递给第三方。

© All rights with Robert Bosch GmbH, including trademark / patent applications. Any right of disposal, as copying and distribution to third parties is ours.

## 3.2 人工排气次序 Diagnostic sequence “Repair Bleeding”

| 诊断步骤<br>Diag. Step | 诊断功能<br>Diagnostic function | 参考章节<br>Details chapter |
|---|---|---|
| 01 | 建立扩展诊断模式<br>Start Extended Diagnostic Session | **6.1.1** |
| 02 | 车辆信息识别<br>ECU Identification | **6.1.2** |
| 03 | 检查系统状态（阀组与电机状态)<br>Check system status(VR & MR status) | **6.1.3** |
| 04 | 左后轮排气(Phase 1)<br>Start of the Repair Bleed Routine for the wheel RL (Phase 1) | **6.3.1** |
| 05 | 检查人工排气程序执行情况（可选）<br>Evaluation of Repair Bleeding Routine status (optional) | **6.3.5** |
| 06 | 左前轮排气(Phase 2)<br>Start of the Repair Bleed Routine for the wheel FL (Phase 2) | **6.3.2** |
| 07 | 检查人工排气程序执行情况（可选）<br>Evaluation of Repair Bleeding Routine status (optional) | **6.3.5** |
| 08 | 右前轮排气(Phase 3)<br>Start of the Repair Bleed Routine for the wheel FR (Phase 3) | **6.3.3** |
| 09 | 检查人工排气程序执行情况（可选）<br>Evaluation of Repair Bleeding Routine status (optional) | **6.3.5** |
| 10 | 右后轮排气(Phase 4)<br>Start of the Repair Bleed Routine for the wheel RR (Phase 4) | **6.3.4** |
| 11 | 检查人工排气程序执行情况（可选）<br>Evaluation of Repair Bleeding Routine status (optional) | **6.3.5** |
| 12 | 检查系统状态（阀组与电机状态)<br>Check system status(VR & MR status) | **6.1.3** |
| 13 | 写入过程字节<br>Write Process Byte | **6.1.6** |
| 14 | 读取故障代码<br>Read DTC | **6.1.5** |
| 15 | 清除故障代码<br>Clear DTC | **6.1.4** |
| 16 | 结束扩展诊断模式<br>End of Extended Diagnosis Session | **6.1.7** |



©博世保留商标和专利应用在内的所有权力，未经我公司许可不得复制或传递给第三方。

© All rights with Robert Bosch GmbH, including trademark / patent applications. Any right of disposal, as copying and distribution to third parties is ours.

## 4 抽真空加注过程步骤描述 E&F Process Step Description

所有的博世 ABS 部件, 液压调节器是以干燥的状态（无制动液）提交到客户装配工厂的。
液压调节器的第一回路和第二回路都是干燥的。为了对整个调节器抽真空/加注，必须采取电器连接措施和附加设备使阀和泵电机通电，用预定的只读存储器常驻程序去启动阀和泵马达。
除了抽真空和加注时间要适合 ABS 调节器节流孔的设计，该程序将以与标准的基础制动系统相同的方式执行。由于自身的限制这将延长抽真空和加注时间。
通过连接车辆的诊断接头（需要完整的安装）或者连接到 ABS 调节器接头（需要一个外部汽车蓄电池的外部电源供应作为缓冲器-博世推荐）。
液压调节器的真空度和最小加注压力数据在液压调节器的客户技术文件中和本文件中有详细规定。
本文档还规定了外部电源的技术数据。
抽真空/加注设备必须能满足本文档规定的要求。
为了达到一个充分的真空度，所有的元件，比如主缸，制动钳和压力安全阀必须满足本文档规定的最低要求。
生产线时间节拍的最终确定只能由生产件试验（或接近生产件水平的部件）和在线设备通过试验来确定。
在线设备可能根据车辆液压配置的要求修改。
假如抽真空/加注循环有任何失效或有液压单元的替换，特定的修理程序必须按特定的程序进行，参见各自文件。

All the Bosch ABS components, such as hydraulic modulator is delivered to the customers assembly plant in a dry state (free of brake fluid).
Both, primary and secondary circuits of the hydraulic modulator are dry. In order to evac/fill the entire modulator, valves and pump motor must be energized by using electrical adaptations and an additional equipment’s to fire valves and pump motors with a predefined ROM resident routine.
The procedure will then be executed in a same way than a standard foundation brake system with the exception of the evacuation and fill times to be adapted onto the design of the ABS modulator orifice sizes. This will extend the evacuation and fill times by physical limitations.
The electrical adaptation can either be done by connecting onto the diagnostic link of the vehicle (requires a complete installation) or onto the modulator connector (requires an external power supply with an external car battery as a buffer – Bosch recommendation).
The data for vacuum levels and minimum fill pressure of the hydraulic modulator are specified in the “Technical Customer Documentation” of the hydraulic modulator as well as in this document.
Technical data for external power supply are also specified in this document.
The evac/fill equipment must be capable to meet the requirements as specified in this document.
In order to achieve a sufficient vacuum level, all components, such as master cylinder, wheel callipers and pressure relieve valves must meet the minimum requirements as specified in this document.
The final timing of the production cycle can only be determined by trials with production parts (or parts close to production level) and on line equipment.
On line equipment may need to be modified onto the requirements of the hydraulic configuration of the vehicle.
In case of any failures of the evac/fill cycle or a replacement of the hydraulic modulator, a repair bleed procedure must be performed according to a specific sequence. Refer to separate document.

对客户提供的测试设备的要求：Requirements for the test facilities provided by the customer:
-与博世电子控制单元的通讯 Communication with the Bosch ECU
-测试次序的控制 Control of the test sequence
-抽真空/加注设备的控制 Control of the evac/fill equipment
-数据评估 Evaluation of the data
-发布流程协议 Issue process protocol



©博世保留商标和专利应用在内的所有权力，未经我公司许可不得复制或传递给第三方。

© All rights with Robert Bosch GmbH, including trademark / patent applications. Any right of disposal, as copying and distribution to third parties is ours.

## 4.1 流程图 Process Diagram

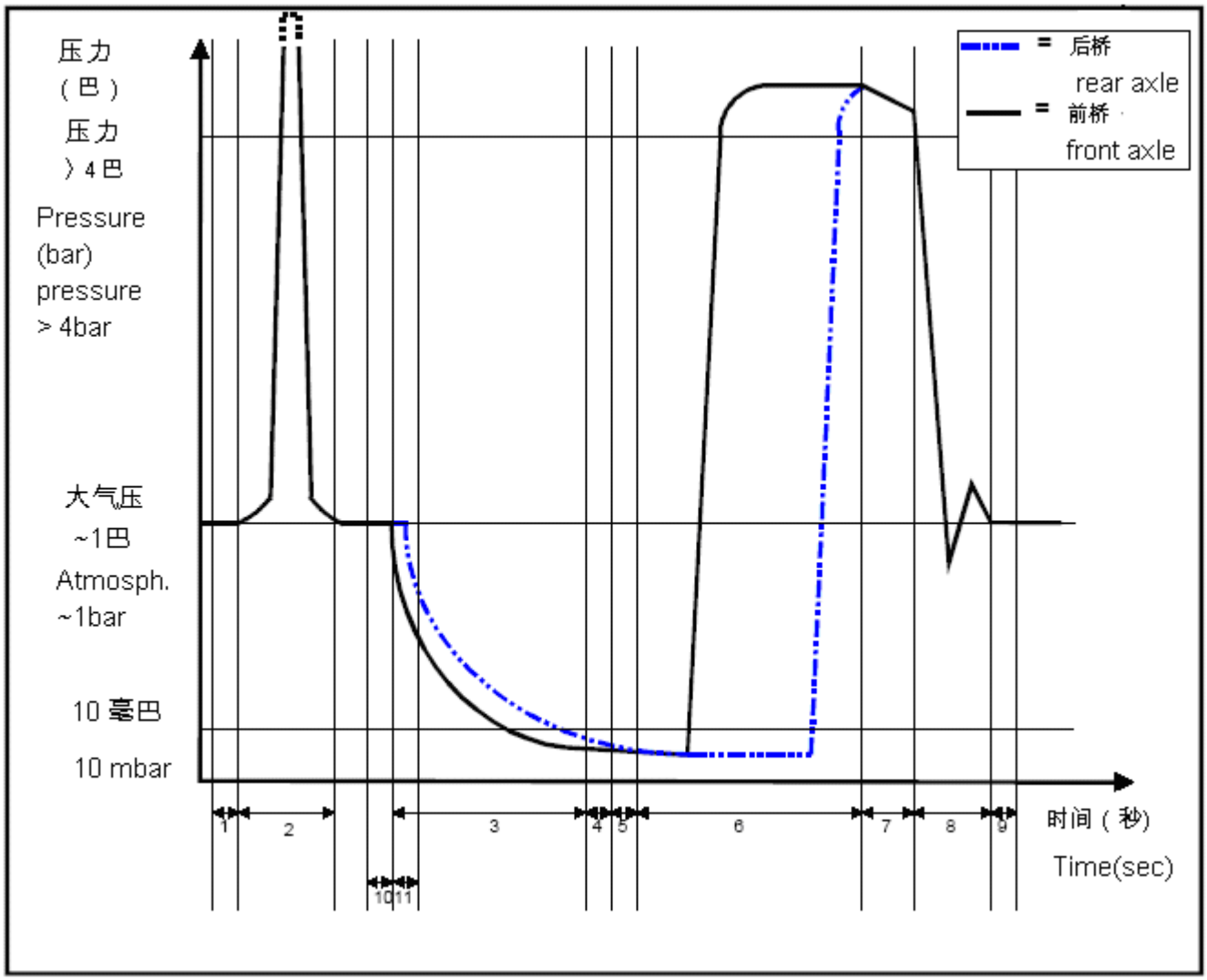




©博世保留商标和专利应用在内的所有权力，未经我公司许可不得复制或传递给第三方。

© All rights with Robert Bosch GmbH, including trademark / patent applications. Any right of disposal, as copying and distribution to third parties is ours.

| 图列：Diagram Columns: | | |
|---|---|---|
| 项目编号：<br>Item no.: | 操作：Activity: | 备注：<br>Remarks: |
| 1 | 处理Handling | 接通加注头.接通电气连接<br>Hook up fill head. Hook up electrical connections |
| 2 | 空气压力泄漏检查（可选）<br>Air Pressure Leak Check (opt.) | 允许在抽真空循环前进行压力测试。必须满足下面的测试条件。<br>最大压力：20 巴（取决于制动液储液罐）<br>介质：空气，氮气<br>在随后的抽真空流程，需要并且必须保证阀最少启动 20 秒时间！为了减少储能器内腔的锁定压力（可能根据规定的和许可的出口阀泄漏）必须在抽真空循环中使阀在这段最短时间内启动。<br>Pressure tests prior the evacuation cycle are allowed. Follow test conditions have to be met:<br>Maximum Pressure: 20 bar (depends on brake fluid reservoir)<br>Medium: Air, Nitrogen<br>At a following evacuation process, it is required and must be guaranteed, that the valves are actuated a minimum time of 20 seconds! To reduce the locked up pressure in the accumulator chamber (possible to the defined and allowed leakage of the outlet valves) it is necessary to actuate the valves this minimum time during the evacuation cycle. |
| 3 | 抽真空时间<br>Evacuation Time | 在制动钳上真空度达到某个水平的时间，由于后制动钳更大的体积和较小的节流孔，所以后制动钳的抽真空时间比前制动钳长。该抽真空时间是在制动钳上达到规定真空度的时间。<br>Time to achieve a certain level at the callipers.<br>The rear calipers will be slower than the fronts due to higher volumes and minor orifice sizes. This time is the time to achieve the specified vacuum level at the callipers. |
| 4 | 泄漏测试<br>Leak Test | 检查制动系统的接头和外部泄漏，这是机器的运行时间，与系统抽真空时间不相关。<br>To check the fittings and external leaks of the brake system. This time is a machine time and not related to the evac time of the system. |
| 5 | 抽真空时间 2<br>Evacuation Time 2 | 在泄漏测试后，需要该时间恢复足够的真空度。这是机器的运行时间，与系统抽真空时间不相关。<br>This time is required to get back to a sufficient vacuum level after the leak test was performed. It is a machine time and not related to the evac time of the system. |
| 6 | 加注时间<br>Fill Time | 加注前、后制动钳的时间，由于后制动钳更大的体积和较小的节流孔，所以后制动钳的加注时间比前制动钳长。该加注时间是在制动钳上达到规定压力水平的时间。<br>Time to fill both, the front and rear callipers. The rear callipers will be slower than the fronts due to higher volumes and minor orifice sizes. This time is the time to achieve the specified pressure level at the callipers. |
| 7 | 泄漏检查<br>Leak Check | 检查制动系统的接头和外部泄漏<br>To check the fittings and external leaks of the brake system.<br>这是机器的运行时间，与系统加注时间不相关。<br>This time is machine time and not related to the fill time of the system. |



©博世保留商标和专利应用在内的所有权力，未经我公司许可不得复制或传递给第三方。

© All rights with Robert Bosch GmbH, including trademark / patent applications. Any right of disposal, as copying and distribution to third parties is ours.

| | | |
|---|---|---|
| 8 | 加注满（清除）<br>Top Off<br>(Scavenge) | 需要该时间去恢复到大气压并加注储液罐到一定程度。<br>This time is required to get back to atmospheric pressure and to top off the reservoir to a certain level.<br>这是机器的运行时间，与系统加注时间不相关。<br>This time is a machine time and not related to the fill time of the system. |
| 9 | 处理<br>Handling | 拆卸加注头，拔掉电器连接。<br>Remove fill head. Unplug electrical connections |
| 10 | 诊断定时<br>Diagnostic Timing | 为了优化整个定时，建议初始化电子控制单元，建立通讯，检查系统状态和启动只读存储器常驻程序在抽真空开始后延迟使阀循环运行。该延迟时间取决于总的循环时间.<br>In order to optimize the entire timing, it is recommended to initiate the ECU, establish communication, check the system status and start the ROM resident routine to cycle the valves with a delay after the start of the evacuation. This delay time depends on the total cycle time. |

## 4.2 操作 Handling

| 操作 Handling | |
|---|---|
| 操作员<br>Operator | 诊断单元/电子控制单元<br>Diagnostic Unit / ECU |
| ☞ 根据储液罐调整加注头<br>Adapt fill head to the reservoir<br>☞ 连接电气连接<br>Adapt electrical connection<br>☞ 接通点火开关<br>Turn Ignition ON<br>☞ 开始流程<br>Start Process | 接通外部电源<br>Turn external power supply ON |

## 4.3 空气压力泄漏检查（可选）Air Pressure Leak Check (optional)

| 空气压力泄漏检查（可选） Air Pressure Leak Check(optional) | | |
|---|---|---|
| 抽真空/加注装置 Evac/Fill Unit | 条件 Conditions | 数值 Value |
| 空气压力泄漏检查<br>Air Pressure leak check | -在规定的测试时间内压力水平降低：<br>Pressure level decrease within a determined test time<br>-泄漏检查时间：主缸储液罐的最大压力水平(待达到)<br>time for leak check: maximum pressure level on the master cylinder reservoir (to be achieved) | 巴（待定）<br>tbd bar<br>秒（待定）<br>tbd sec |

空气压力泄漏检测正常 ⇒ 继续
空气压力泄漏检测不正常 ⇒ 继续，设置故障信息
Air Pressure Leak Check OK ⇒ continue
Air Pressure Leak Check NOK ⇒ continue, set failure message



©博世保留商标和专利应用在内的所有权力，未经我公司许可不得复制或传递给第三方。

© All rights with Robert Bosch GmbH, including trademark / patent applications. Any right of disposal, as copying and distribution to third parties is ours.

## 4.4 抽真空循环 Evacuation Cycle

| 抽真空循环<br>Evacuation Cycle | | |
|---|---|---|
| 抽真空/加注 装置<br>Evac/Fill Unit | 条件<br>Conditions | 数值<br>Value |
| 抽真空循环<br>Evacuation cycle | 在主缸储液罐上的最小真空度（待达到）：<br>Minimum vacuum level on the master cylinder reservoir (to be achieved):<br>在车轮制动钳上的最小真空度（待达到）：<br>Minimum vacuum level on the wheel callipers (to be achieved):<br>抽真空时间:<br>Evacuation time: | <2 毫巴<br><2 mbar<br><br><10 毫巴<br><10 mbar<br><br>秒（时间待定）<br>tbd sec |
| 泄漏检查<br>Leak Check | 在主缸储液罐上的最小真空度（待达到）：<br>Minimum vacuum level on the master cylinder reservoir (to be achieved): | 毫巴（待定）<br>tbd mbar |

备注：
由于每个部件的压力下降，为了在制动钳上得到一个好的真空度，抽真空/加注装置必须能够在主缸储液罐内达到充足的真空度。
抽真空时间是与液压调节器节流孔尺寸以及制动钳，管子和软管容积相关的功能，必须通过使用在线设备进行生产部件的试验来设置该抽真空时间。
测试仪和电子控制单元之间的通讯建立以及后续章节描述的相应功能能够在抽真空循环的最初几秒相整合，以获得一个较小的抽真空时间的延缓（大约 2~4 秒）。
泄漏检查对整个制动系统检测泄漏的情况。
抽真空值 正常 ⇒ 继续
抽真空值 不正常 ⇒ 终止

Remarks:
The evac/fill unit must be capable to achieve a sufficient vacuum level at the master cylinder reservoir in order to get a good vacuum level on the wheel callipers due to the pressure drop of each component.
The evacuation time is a function out of the orifice sizes of the hydraulic modulator and the volumes of the wheel callipers, the pipes and hoses and must be set by running trials with production level components, using the on line equipment.
The communication set up between the Tester and the ECU and the corresponding functions as described in the following chapters can be integrated within the first seconds of the evacuation cycle with a minor extension of the evacuation time (approximately 2 to 4 seconds).
The Great leak check detects big leakages in the entire brake system.
Evacuation value OK ⇒ Continue
Evacuation value NOK ⇒ Abort



©博世保留商标和专利应用在内的所有权力，未经我公司许可不得复制或传递给第三方。

© All rights with Robert Bosch GmbH, including trademark / patent applications. Any right of disposal, as copying and distribution to third parties is ours.

## 4.5 加注循环 Fill Cycle

| 加注循环 Fill Cycle | | |
|---|---|---|
| 抽真空/加注设备<br>Evac/Fill Unit | 条件 Conditions | 数值 Value |
| 加注循环<br>Fill cycle | 主缸储液罐上的最小压力水平（绝对值）：<br>minimum pressure level on the master cylinder reservoir (absolute):<br>主缸储液罐上的最大压力水平：<br>maximum pressure level on the master cylinder reservoir:<br>车轮制动钳上的最小压力水平（待达到）：<br>minimum pressure level on the wheel callipers (to be achieved):<br>加注时间：<br>fill time: | > 4 巴<br>> 4 bar<br><br>受制动储液罐的限制<br>limited due to brake reservoir<br><br>秒（待定）<br>tbd sec |

备注：
**加注过程中ABS电机必须启动，以确保加注的效果。**
抽真空/加注装置必须能够在总泵储液罐内达到充足的加注压力，以确保由于各部件压力下降而获得适当的加注和抽吸动力。
加注时间是一个与液压调节器的节流孔尺寸和车轮制动钳、管子和软管容积相关的功能，必须通过使用在线设备运行生产部件的试验来设置该加注时间。
在整个加注循环中阀将起动。
加注正常 ⇒ 继续
加注不正常 ⇒ 中止

Remarks:
**For the best performance, the pump motor must be on during fill cycle.**
The evac/fill unit must be capable to achieve a sufficient fill pressure at the master cylinder reservoir in order to get a proper fill and pump supply due to the pressure drop of each component.
The fill time is a function out of the orifice sizes of the hydraulic modulator and the volumes of the wheel callipers, the pipes and hoses and must be set by running trials with production level components, using the on line equipment.
Valves will be activated during the entire fill cycle.
Filling OK ⇒ Continue
Filling NOK ⇒ Abort



©博世保留商标和专利应用在内的所有权力，未经我公司许可不得复制或传递给第三方。

© All rights with Robert Bosch GmbH, including trademark / patent applications. Any right of disposal, as copying and distribution to third parties is ours.

## 4.6 加注满储液罐（清除）Top of Reservoir (Scavenging)

| 加注满储液罐（清除）<br>Top of Reservoir (Scavenging) | | |
|---|---|---|
| 抽真空/加注设备 Evac/Fill Unit | 条件 Conditions | 数值 Value |
| 加注满储液罐（清除）<br>Top of reservoir (Scavenging) | -将储液罐液面设定至正确极限值<br>Set reservoir level to correct limits<br>-加注满时间:<br>time for top of: | 秒（待定）<br>tbd sec |

备注：
必须加注储液罐至确定的液面。
必须根据客户的相关要求设置该测试步骤的定时。
液面正常 ⇒ 继续
液面不正常 ⇒ 继续，设置故障信息
Remarks:
The reservoir must be filled to a certain level.
The timing of this test step must be set to customer related requirements.
Level OK ⇒ continue
Level NOK ⇒ continue, set failure message

## 4.7 结束操作 End of Cycle/ Handling

| 结束操作 End of Cycle / Handling | |
|---|---|
| 操作者 Operator | 诊断的 ECU Diagnostic Unit / ECU |
| ☞ 关闭点火开关 Turn Ignition (Power supply) OFF<br>☞ 断开电气连接 Remove electrical connection<br>☞ 拿开加注枪头 Remove fill head | 关闭外部电源 Turn external power supply OFF |

备注：
关闭电源或点火开关取决于设备的设计。
在使用外部电源的情况下，操作者应先关闭设备再断开电气连接。
在使用车辆电池的情况下，操作者应先关闭点火开关再断开电气连接。
Remarks:
Turning off the power supply or the ignition depends onto the design of the equipment.
In case of an external power supply, the equipment has to turn off prior to the disconnection of the harness by the operator.
In case of using the vehicle battery, the operator has to turn off the ignition prior to disconnect the harness from the system.



©博世保留商标和专利应用在内的所有权力，未经我公司许可不得复制或传递给第三方。

© All rights with Robert Bosch GmbH, including trademark / patent applications. Any right of disposal, as copying and distribution to third parties is ours.

## 4.8 诊断功能和启动图 Diagram of diagnostic functions and actuation's

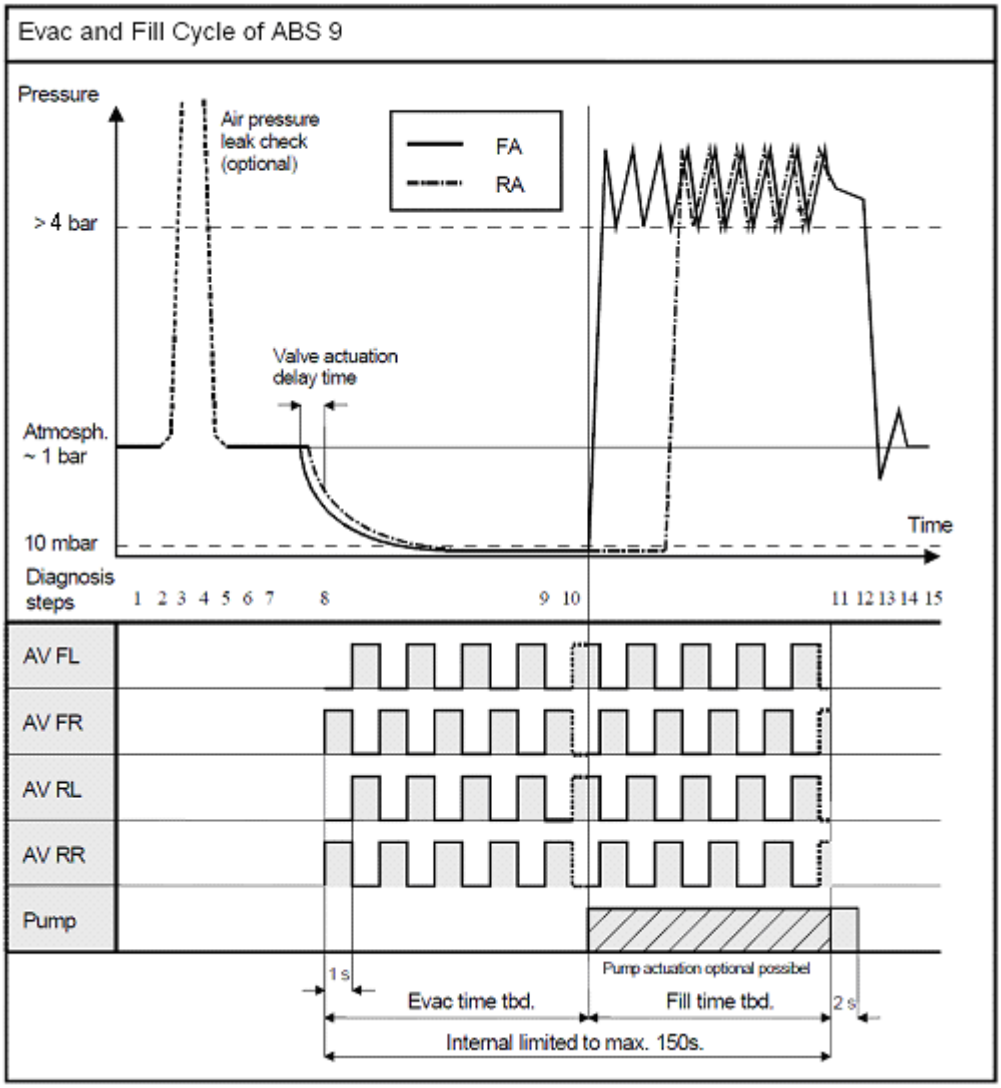


备注：
**加注全过程中ABS电机必须启动，以确保加注的效果。**
加注完成后泵电机最少持续工作两秒去排空储能器内腔。泵的启动是必须的且必须保证其执行。因为储能器内腔被加注满后 ABS 的控制不能实现。
在一些项目中，整个抽真空/加注流程时间可能比阀的限制起动时间要长。针对这些项目，博世建议留出起动延迟时间，以起动只读存储器固化功能。

Remarks:
**For the best performance, the pump motor must be on during whole fill cycle.**
After filling keep a pump actuation of two more seconds is absolutely necessary to discharge the accumulator chamber. Because no ABS control is possible with a filled accumulator chamber.
At some projects the entire evac/fill process could be longer than the limited actuation time of the valves. For these projects Bosch recommends an actuation delay time to start the ROM resident function.



©博世保留商标和专利应用在内的所有权力，未经我公司许可不得复制或传递给第三方。

© All rights with Robert Bosch GmbH, including trademark / patent applications. Any right of disposal, as copying and distribution to third parties is ours.

## 5 人工排气过程步骤描述 Repair Bleeding Process Step Description

所有在线抽真空/加注过程中失败，或者被干式件取代的系统，都必须以本文描述的特定程序进行人工排气。
为了在液压调节器中达到足够的压力，在整个排液过程中必须往复地踩刹车踏板。
这个过程和正常的制动系统排气基本一样，除了在时间上有一定的延长，这是为了满足液压调节器第二回路的排气要求。
通过与车辆诊断口相连完成设备连接。
关于增压参数和压力来源在本文和“客户技术文档”中都有详细说明。
加注装置必须能够满足本文列举的所有要求。
为了能够达到充分排气的要求，所有的部件，包括主缸，制动卡钳和出液阀必须满足此文件提出的最低要求。
最终的生产流程时间必须由产品件（或接近产品状态的部件）测试和离线检测设备决定。
为了满足车辆液压设置的要求，离线设备也需要进行一定的改进。

All systems that failed the on line evac/fill process or might be replaced by dry units, must be repair bled within a specific procedure as described in this document.
In order to achieve a sufficient pressure within the hydraulic modulator, the brake pedal must be stroked during the entire bleed procedure.
The procedure will then be executed in a same way than a standard foundation brake system with the exception of the extended timing that is required to bleed the secondary sections of the hydraulic modulator.
The electrical adaptation will be done by connecting onto the diagnostic link of the vehicle (requires a complete installation).
The data for pressure apply and pressure source are specified in the “Technical Customer Documentation” of the hydraulic modulator as well as in this document.
The bleeder unit must be capable to meet the requirements as specified in this document.
In order to achieve a sufficient bleed result, all components, such as master cylinder, wheel callipers and pressure relieve valves must meet the minimum requirements as specified in this document.
The final timing of the production cycle can only be determined by trials with production parts (or parts close to production level) and off line equipment.
Off Line Equipment may need to be modified onto the requirements of the hydraulic configuration of the vehicle.

对客户测试设备的要求：
- 与博世电子控制单元的通讯
- 测试次序的控制

Requirements for the test facilities provided by the customer:
- Communication with the Bosch ECU
- Control of the test sequence



©博世保留商标和专利应用在内的所有权力，未经我公司许可不得复制或传递给第三方。

© All rights with Robert Bosch GmbH, including trademark / patent applications. Any right of disposal, as copying and distribution to third parties is ours.

## 5.1 操作 Handling

| 操作 Handling | |
|---|---|
| 操作员<br>Operator | 诊断单元/电子控制单元<br>Diagnostic Unit / ECU |
| ☞ 连接排气设备和储液罐<br>Adapt bleeder unit to the reservoir<br>☞ 连接电气连接<br>Adapt electrical connection<br>☞ 接通点火开关<br>Turn Ignition ON | |

备注：
车辆在进入排气区域前已经组装完好。
通过和车辆的诊断连接，完成电子连接。
操作者必须确保车辆点火钥匙位于”开”档。

Remarks:
In the repair area, the vehicle is already completely installed.
The electrical connection is done via the diagnostic link of the vehicle.
The operator must turn the ignition ON.



©博世保留商标和专利应用在内的所有权力，未经我公司许可不得复制或传递给第三方。

© All rights with Robert Bosch GmbH, including trademark / patent applications. Any right of disposal, as copying and distribution to third parties is ours.

## 5.2 排气过程描述 Bleed Process Description

| 排气过程 Bleeding Procedure: | |
|---|---|
| 操作Operator | 诊断单元/ECU Diagnostic Unit / ECU |
| **在整个排气过程中可以以2秒/次的频率反复踩刹车踏板！！！**<br>Stroke brake pedal with a frequency 0.5 during the entire bleed procedure!!! | |
| 打开左后轮的排气螺栓<br>Open bleed screw rear left<br>执行程序，对左后轮排气<br>Start the routine and bleed the wheel rear left<br>程序执行完毕后，直到排气螺钉流出的制动液没有泡沫再关闭左后轮的排气螺栓<br>After routine finished, close bleed screw rear left until there is foamless and bubble free brake fluid seen at the bleed screw. | 执行只读存储程序的第一阶段<br>Execute ROM resident routine phase 1 |
| 打开左前轮的排气螺栓<br>Open bleed screw front left<br>执行程序，对左前轮排气<br>Start the routine and bleed the wheel front left<br>程序执行完毕后，直到排气螺钉流出的制动液没有泡沫再关闭左前轮的排气螺栓<br>After routine finished, close bleed screw front left until there is foamless and bubble free brake fluid seen at the bleed screw. | 执行只读存储程序的第二阶段<br>Execute ROM resident routine phase 2 |
| 打开右前轮的排气螺栓<br>Open bleed screw front right<br>执行程序，对右前轮排气<br>Start the routine and bleed the wheel front right<br>程序执行完毕后，直到排气螺钉流出的制动液没有泡沫再关闭右前轮的排气螺栓<br>After routine finished, close bleed screw front right until there is foamless and bubble free brake fluid seen at the bleed screw. | 执行只读存储程序的第三 阶段<br>Execute ROM resident routine phase 3 |
| 打开右后轮的排气螺栓<br>Open bleed screw rear right<br>执行程序，对右后轮排气<br>Start the routine and bleed the wheel rear right<br>程序执行完毕后，直到排气螺钉流出的制动液没有泡沫再关闭右后轮的排气螺栓<br>After routine finished, close bleed screw rear right until there is foamless and bubble free brake fluid seen at the bleed screw. | 执行只读存储程序的第四阶段<br>Execute ROM resident routine phase 4 |

备注：
加注设备的加注压力必须超过 2bar。为了充分排气，在整个过程中必须往复踩刹车踏板。
**排气过程的顺序必须为：左后/左前/右前/右后。**
**如果要重复某个阶段或者整个排气过程，必须等待 5 分钟，从而让电磁阀冷却，否则电磁阀可能会由于过热而被损坏。**



©博世保留商标和专利应用在内的所有权力，未经我公司许可不得复制或传递给第三方。

© All rights with Robert Bosch GmbH, including trademark / patent applications. Any right of disposal, as copying and distribution to third parties is ours.

Remarks:
It is necessary to use a bleeding device with an overpressure of 2 bars. It is absolutely necessary to push alternate the brake pedal during the entire bleeding process to guarantee a correct bleeding result.
The sequence always follows the wheel directions: RL / FL / FR / RR.
In case of a repetition of a once phase or the entire bleeding routine it is absolute necessary to wait a time of 5 minutes to cool the solenoid valves.



©博世保留商标和专利应用在内的所有权力，未经我公司许可不得复制或传递给第三方。

© All rights with Robert Bosch GmbH, including trademark / patent applications. Any right of disposal, as copying and distribution to third parties is ours.

## 5.3 排气步骤示意图 Schematically diagnostic sequence

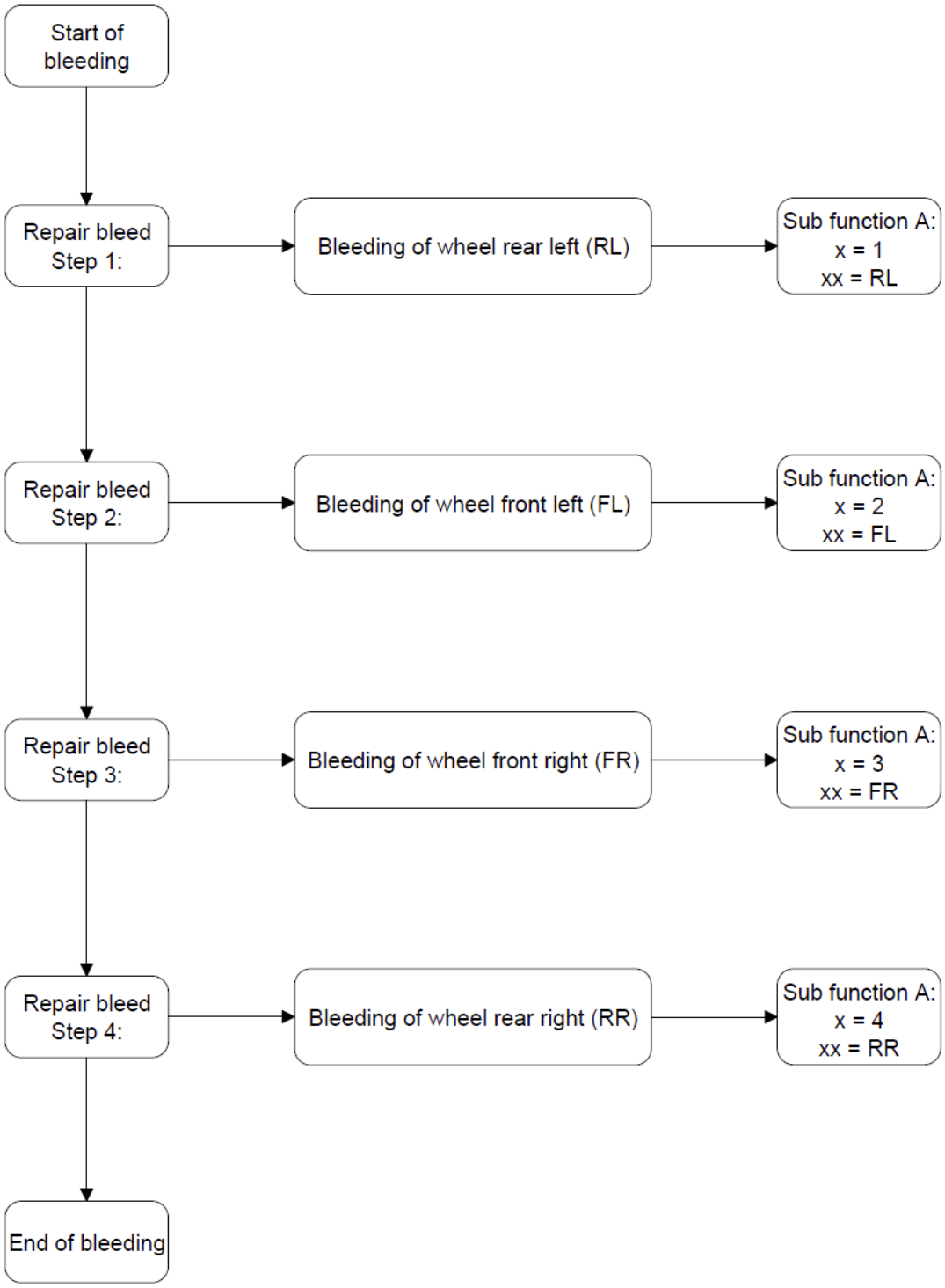




©博世保留商标和专利应用在内的所有权力，未经我公司许可不得复制或传递给第三方。

© All rights with Robert Bosch GmbH, including trademark / patent applications. Any right of disposal, as copying and distribution to third parties is ours.

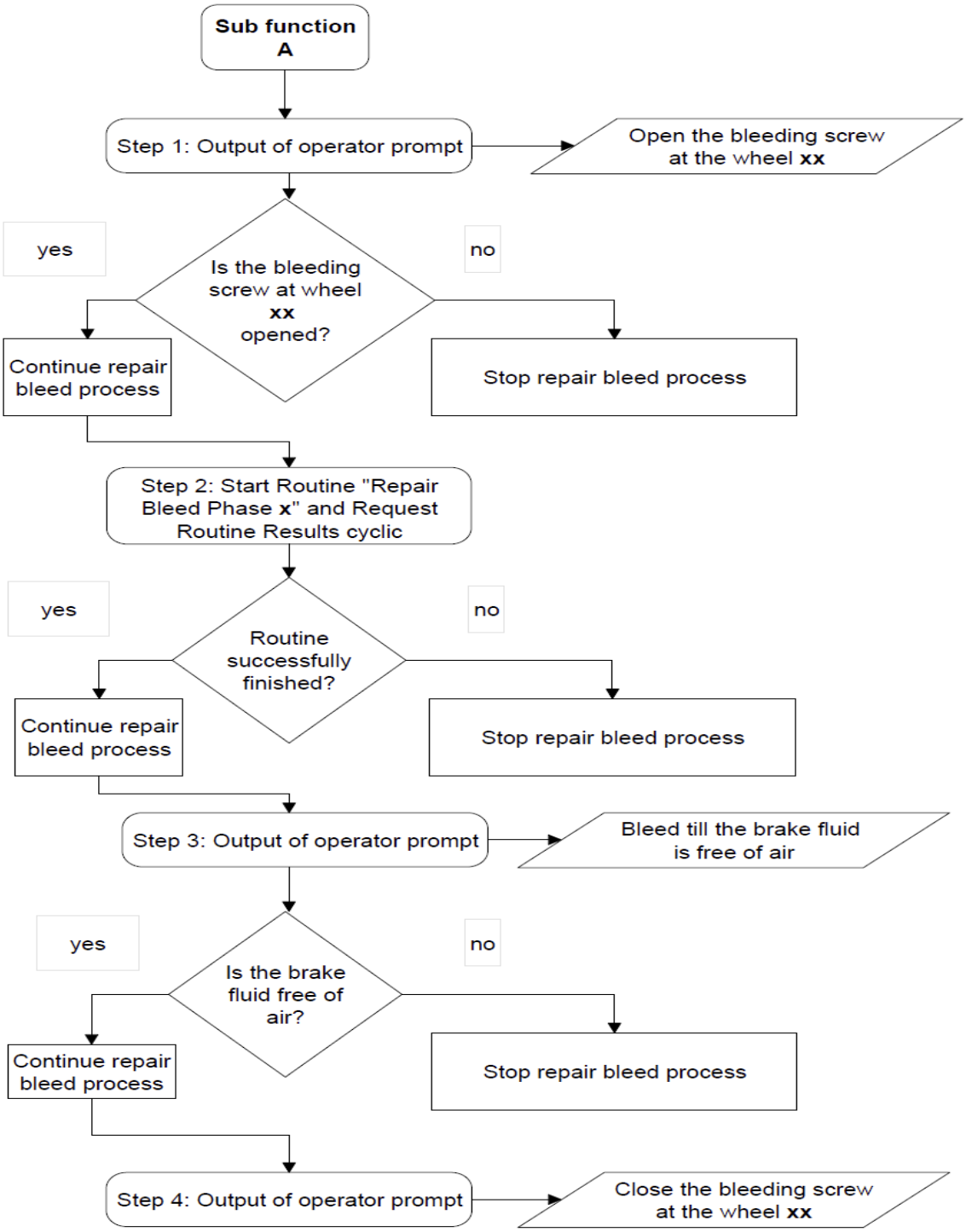




©博世保留商标和专利应用在内的所有权力，未经我公司许可不得复制或传递给第三方。

© All rights with Robert Bosch GmbH, including trademark / patent applications. Any right of disposal, as copying and distribution to third parties is ours.

备注:
排气螺钉一直保持打开直到只读存储程序结束，并且流出的制动液没有空气和气泡。
整个人工排气过程包括第一和第二回路的液压单元排气。在只读存储程序被完全执行后，整个制动系统油路内必须没有空气和气泡。

Remarks:
The screw has been open until the ROM resident routine is finished (waiting time look above) and the brake fluid is air and bubble free.
The repair bleed process included the primary and secondary bleeding of the hydraulic unit. After execution of the ROM resident routines and two additional steps (only required in case of the complete brake system is dry before bleeding) the entire brake system should be free of air.

## 5.4 加注满储液罐（清除） Top of Reservoir (Scavenging)

| 加注满储液罐（清除）<br>Top Of Reservoir (Scavenging) | | |
|---|---|---|
| 加注设备 Fill Unit | 条件 Conditions | 数值 Value |
| 加注满储液罐（清除）<br>Top of reservoir (Scavenging) | -将储液罐液面设定至正确极限值<br>Set reservoir level to correct limits<br>-加注满时间:<br>time for top of: | 秒（待定）<br>tbd sec |

备注：
必须加注储液罐至确定的液面。
必须根据客户的相关要求设置该测试步骤的定时。
液面正常 ⇒ 继续
液面不正常 ⇒ 继续，设置故障信息
Remarks:
The reservoir must be filled to a certain level.
The timing of this test step must be set to customer related requirements.
Level OK ⇒ continue
Level NOK ⇒ continue, set failure message



©博世保留商标和专利应用在内的所有权力，未经我公司许可不得复制或传递给第三方。

© All rights with Robert Bosch GmbH, including trademark / patent applications. Any right of disposal, as copying and distribution to third parties is ours.

## 5.5 结束操作 End of Cycle/ Handling

| 结束操作 End of Cycle / Handling | |
|---|---|
| 操作者 Operator | 诊断的 ECU Diagnostic Unit / ECU |
| ☞ 关闭点火开关 Turn Ignition (Power supply) OFF<br>☞ 断开电气连接 Remove electrical connection<br>☞ 拿开加注枪头 Remove fill head | 关闭外部电源 Turn external power supply OFF<br>💻 |



©博世保留商标和专利应用在内的所有权力，未经我公司许可不得复制或传递给第三方。

© All rights with Robert Bosch GmbH, including trademark / patent applications. Any right of disposal, as copying and distribution to third parties is ours.

# 6 通讯指令 Communication Command

## 6.1 通用通讯指令 General Command

### 6.1.1 建立扩展诊断模式 Start Extended Diagnostic Session

| 诊断功能：建立通讯 Diagnostic Function: Start Diagnostic Mode | |
|---|---|
| Service Identifier: | 10 H |
| Sub Function: | 83 H |

肯定的回复 Positive response

| | |
|---|---|
| Service Positive Response Identifier: | 50 H |
| Sub Function: | 83 H |

备注：
**参见诊断功能文件确定 ECU 每个字节的定义, 值和范围。以下章节也同样如此。**
根据相应的规格，以 KWP2000 诊断为基础在测试仪和电子控制单元之间建立通信。
在系统通电之后，可以立即起动。
如果未成功建立通信，在测试中断之前应重复大约 3 次。
通信不成功 ⇒ 设置故障信息，终止
通信成功 ⇒ 继续

Remarks:
See ECU data in diagnostic specification for details of byte numbers, values and ranges. The next chapters are same.
The communication set up between the Tester and the ECU is based on the KWP2000 diagnosis according to the corresponding specification.
It can be started immediately after the system is powered up.
In case of a non successful communication set up repeat for about 3 times before the test is interrupted.
Communication not successful ⇒ set failure message, abort
Communication successful ⇒ continue



©博世保留商标和专利应用在内的所有权力，未经我公司许可不得复制或传递给第三方。

© All rights with Robert Bosch GmbH, including trademark / patent applications. Any right of disposal, as copying and distribution to third parties is ours.

### 6.1.2 电子控制单元识别 ECU-Identification

| 诊断功能：读取电子控制单元标志符 **Diagnostic Function: Read ECU Identification** | |
|---|---|
| 服务代码 Service Identifier: | 1A H |
| 代码选项 IdentificationOption | 80 H |

肯定的回复 Positive response

| **ECU _ TESTER: [SERVICE] - Positive Response** | | |
|---|---|---|
| **Byte** | **Contents** | **Value** |
| 0 | Service Positive Response Identifier | 5A H |
| 1 | Local Identifier | 80 H |
| 2…6 | Vehicle Name (ASCII, 5 bytes) | xx xx xx xx xx H |
| 7…9 | System Name (ASCII, 3 bytes) | xx xx xx H |
| 10…12 | BBNumber (BCD, 3 Bytes) | xx xx xx H |
| 13…16 | S/W Version (BCD, 4 bytes) | xx xx xx xx H |
| 17…21 | Supplier Specific Part Number (BCD, 5 bytes) | xx xx xx xx xx H |
| 22…34 | Customer Specific Part Number (ASCII ) 13 bytes | xx…xx H |

待评估的电子控制单元识别数据必须由客户及其装配工厂确认。
电子控制单元识别数据必须和诊断仪中存储的默认数据进行对比，以确保所选择的阀启动程序正确无误。当 ABS 软件升级时，电子控制单元识别数据将发生变更，因此诊断仪和抽真空加注设备中的数据库应当能用编辑菜单进行方便的升级。关于“电子控制单元识别”更多信息请参考客户诊断功能描述。

未知系统 ⇒ 终止测试
正确系统 ⇒ 继续

Remarks:
The to be evaluated ECU identification data must be confirmed by the customer and its assembly plants.
The ECU identification data must be compared with the in the tester software stored desired ECU data. This is required to select the right valve activation sequence. The ECU identification data might be changed in case of



©博世保留商标和专利应用在内的所有权力，未经我公司许可不得复制或传递给第三方。

© All rights with Robert Bosch GmbH, including trademark / patent applications. Any right of disposal, as copying and distribution to third parties is ours.

an ABS software update respectively modification, therefore it must be easily possible with editor menu to update the data base of the tester respectively evacuation and filling equipment.
More details to the chapter “ECU identification” are to be inferred from the customer specific documentations.
Unknown System ⇒ Abort Test
System detected ⇒ Continue

### 6.1.3 检查系统状态 Check System Status

| 诊断功能：读取数据 Diagnostic Function: ReadDataByLocalIdentifier | |
|---|---|
| 服务代码 Service Identifier: | 21 H |
| 数据代码 RecordLocalIdentifier: | 09 H |

肯定的回复 Positive response

| | |
|---|---|
| 服务代码 Service Positive Response Identifier: | 61 H |
| 数据代码 RecordLocalIdentifier: | 09 H |
| 数据代码 Data record Byte 1 (MSB): | 00 H |
| 数据代码 Data record Byte 2 (LSB): | 01 H |

备注：
在 抽真空加注/人工排气 过程前诊断设备必须识别 ECU 的状态，主动或被动状态
在检测任何失败的情形下，ECU 会关闭系统取消阀和电机的动作
**下面的失败情形会导致系统的关闭：阀的错误，阀继电器的错误，电机及其继电器的错误**
应通过检测软件的数值范围来校验 ECU 的数据
数据错误 ⇒ 设置故障信息，退出
数据正确 ⇒ 继续

Remarks:
Prior to the E&F/Repair Bleeding process, the diagnostic equipment must identify whether the ECU is active or passive.
In case of any failure detection, the ECU will have disabled the system and have aborted the valve and pump motor activation’s.
**Following failures lead to a shut down of the system: all valve faults, VR fault, RFP and MR faults**.
The ECU data must be verified with the limit data of the tester software.
Data correct ⇒ Continue
Data not correct ⇒ Failure message, abort



©博世保留商标和专利应用在内的所有权力，未经我公司许可不得复制或传递给第三方。

© All rights with Robert Bosch GmbH, including trademark / patent applications. Any right of disposal, as copying and distribution to third parties is ours.

### 6.1.4 清除故障代码 Clear DTC

| 诊断功能：清除故障码 Diagnostic function: Clear Diagnostic Information | |
|---|---|
| Service Identifier: | 14 H |
| Group Of DTC-High Byte: | FF H |
| Group Of DTC-Middle Byte: | FF H |
| Group Of DTC-Low Byte: | FF H |

肯定的回复 Positive response

| | |
|---|---|
| Service Positive Response Identifier: | 54 H |

备注：
详参见诊断功能文件确定 ECU 数值。
根据系统调节和车辆线束的安装情况，故障代码可能在 抽真空加注/人工排气 流程中已保存在电子控制单元内。
本步骤可以擦除电子控制单元的故障代码存储器中的内容。不能清除实际的故障代码（项目特定）。
只有在流程中可以包含定时的情况下才可能包含。否则，必须包含在另一个诊断测试在线设备中，比如生产线终点测试。当电子控制单元处于诊断模式时，只有在诊断模式并没有随着“诊断终点”指令结束条件下，才可以通过关闭电源来擦除故障代码存储器中的内容。

Remarks:
See ECU data in diagnostic spec. for details.
Depending to the adaptation onto the system and the installation of the vehicle harness, fault codes may have been stored in the ECU during the E&F/Repair Bleeding process.
This step allows erasing the fault code memory of the ECU. Different actual fault codes cannot be cleared (project specific).
It is only possible if the timing allows to be integrated in the process. Otherwise it must be included in another diagnostic test equipment on line such as the end of line testing.
Erasing the fault code memory can only be performed if the diagnostic mode is not ended with the command “end of diagnosis“, but by turning the power supply off while the ECU is in diagnostic mode.



©博世保留商标和专利应用在内的所有权力，未经我公司许可不得复制或传递给第三方。

© All rights with Robert Bosch GmbH, including trademark / patent applications. Any right of disposal, as copying and distribution to third parties is ours.

### 6.1.5 读取故障代码 Read Status Of DTC

| 诊断功能：读取故障码 Diagnostic function: Read Diagnostic Information | |
|---|---|
| Service Identifier: | 18 H |
| DTCStatus: | 00 H |

肯定的回复 Positive response

| | |
|---|---|
| Service Positive Response Identifier: | 58 H |
| Number of DTC: | XX H |
| 详见诊断功能描述：<br>Details refer to Functional description of diagnosis: | XX…XX H |

备注：
ECU 输出所包含的所有故障码，数据包括几种信息。最大存储个数是 10 个，输出的和实际存在的个数相等。
输出数据应评估：
- 故障码个数
- 故障码状态

测试设备应能输出故障码并报文，只有当前故障码存在才能取消测试，历史故障码应被忽略。
当前故障码 ⇒ 取消测试
无当前故障码 ⇒ 继续（忽略历史故障码）

Remarks:
The ECU outputs the content of the entire fault code memory. This data include several informations. The maximum number of stored faults is 10. The number of the transmitted fault codes is equal to the number of stored fault codes.
Out of the transmitted data, the following must be evaluated:
- Fault code number (DTC)
- The status of DTC

The tester has to evaluate the fault code data, to transform the number into a failure text and to issue a protocol. Only permanent faults will lead to abort the test cycle. History faults must be ignored.
Current fault present ⇒ Abort test
No current fault present ⇒ Continue (Ignore faults)



©博世保留商标和专利应用在内的所有权力，未经我公司许可不得复制或传递给第三方。

© All rights with Robert Bosch GmbH, including trademark / patent applications. Any right of disposal, as copying and distribution to third parties is ours.

### 6.1.6 写入抽真空加注过程控制字节 Write E&F Process Control Byte

| 诊断功能：写入字节 Diagnostic function: WriteDataByLocalIdentifier | |
|---|---|
| 服务代码 ServiceIdentifier: | 3B H |
| 记录局部代码 RecordLocalIdentifier: | 02 H |
| 状态 Status: | XX H |

肯定的回复 Positive response

| | |
|---|---|
| 服务代码 ServiceIdentifier: | 7B H |
| 记录局部代码 RecordLocalIdentifier: | 02 H |

例如：Example:

| 状态 Status: | 数值 Value |
|---|---|
| 加注没有完成 Filling-in not completed | 00 H |
| 加注成功并完成 Filling-in completed and OK | AA H |
| 加注完成但不成功 Filling-in completed and NOK | EE H |

*博世交付的产品预写入值为 FFh Bosch delivery state is FFh.
备注：
电子控制单元用预定义的程序字节“FF 十六进制”送到客户的装配线。该号码被博世保留，以防一个不成功的通讯该数据将还保留在电子控制单元的电可擦除可编程只读存储器中。
在成功的抽真空加注的情形下，将写入客户定义的数值，该数值应得到测试软件的校验。
**在写入过程字节之前需进入安全模式，具体操作详见软件功能描述文档中关于如何进入安全模式的方法。**

数据正确 ⇒ 继续
数据错误 ⇒ 故障信息，继续

Remarks:
The ECU is shipped to the customers' assembly line with a predefined process byte: “FF Hex”. In case of a non successful communication this data will still stay in the EEPROM of the ECU (“incorrect“).
In case of a successful evac/fill process the value will be changed in a defined value of the customer. The ECU data must be verified with the limit data of the tester software.
**There is a must before write the process byte which is the service of security access, detailed information reference documents of functional description of diagnosis.**

Data correct ⇒ Continue
Data not correct ⇒ Failure message, continue



©博世保留商标和专利应用在内的所有权力，未经我公司许可不得复制或传递给第三方。

© All rights with Robert Bosch GmbH, including trademark / patent applications. Any right of disposal, as copying and distribution to third parties is ours.

### 6.1.7 结束扩展诊断模式 End of Extended Diagnosis Session

| Diagnostic Function: Request | |
|---|---|
| 服务代码 ServiceIdentifier: | 82 H |

肯定的回复 Positive Response

| | |
|---|---|
| 服务代码 ServiceIdentifier: | C2 H |



©博世保留商标和专利应用在内的所有权力，未经我公司许可不得复制或传递给第三方。

© All rights with Robert Bosch GmbH, including trademark / patent applications. Any right of disposal, as copying and distribution to third parties is ours.

## 6.2 抽真空加注相关通讯指令 Evacuation and fill Command

### 6.2.1 带电机启动的抽真空和加注指令 Evacuation and Fill Command with pump motor actuation

| 诊断功能：开始执行程序 Diagnostic Function: Start Routine By Local Identifier | |
|---|---|
| Service Identifier: | 31 H |
| Control Option: | 02 H |
| Routine Identifier: | 01 H |
| Evac and Fill Time (1LSB = 1s):**(T)** | XX H |
| Time until start of Pump Motor ((1LSB = 1s):**(T1)** FF = no pump motor | XX H |

**T: 抽真空加注时间 E&F Time**
**T1: 抽真空时间 Evac Time**
**加注过程中ABS电机必须启动，以确保加注的效果。**
**如果马达启动等待时间字节不是FF，在抽真空加注之后，马达将继续转动2秒，以排清储能器中的液体。**
**For the best performance, the pump motor must be on during fill cycle.**
**After evac and filling time, the pump motor will run for 2 additional seconds, if time until start of pump motor byte is not FF.**

肯定的回复 Positive response

| | |
|---|---|
| Service Positive Response Identifier: | 71 H |
| Control Option: | 02 H |
| Supported Control Status: | 01 H |

控制状态 Supported Control Status:

| 状态 Status: | 数值 Value |
|---|---|
| Control/Routine Started successfully by the tester | 01h |
| Control/Routine completed | 02h |
| Control/Routine in progress | 03h |
| Control/Routine stopped | 04h |
| Control/Routine failure or Routine not run | 05h |

备注：
循环定义涵盖ABS 系统。同时还涵盖对角分离制动布置和前/后分离制动布置。



©博世保留商标和专利应用在内的所有权力，未经我公司许可不得复制或传递给第三方。

© All rights with Robert Bosch GmbH, including trademark / patent applications. Any right of disposal, as copying and distribution to third parties is ours.

该程序执行时出液阀一秒开一秒关。
总的抽真空/加注时间取决于整个抽真空和加注流程的持续时间。
最终的生产循环时间只能由生产零件（或接近生产水平的零件）和在线设备的试验来确定。

| | | |
|---|---|---|
| *抽真空/加注时间实例： | 抽真空1： | 45秒 |
| | 精密泄漏检查： | 5秒 |
| | 抽真空2： | 5秒 |
| | 加注： | 35秒 |
| | 总的抽真空/加注起动时间 | 90 秒＝5A 十六进制 |

**从内部将程序限制在 150 秒（96Hex）的最大启动时间内。如果测试仪请求超过许可的 150 秒（96Hex），则电子控制单元使用最大启动时间。不允许在短时间内重复执行程序两次（阀可能由于过热而损坏）。**

**在执行抽真空加注之前需进入安全模式，具体操作详见软件功能描述文档中关于如何进入安全模式的方法。**

Remarks:
The cycle is defined to cover for system ABS. It also covers for front/rear brake split configuration.
The routine switches the outlet and prime valves alternating 1 second on and 1 second off.
The entire evac/fill times depends on the duration of the entire evacuation and fill process.
This final production cycle time can only be determined by trials with production parts (or parts close to production level) and on line equipment.

| | | |
|---|---|---|
| *Example evac/fill time: | Evacuation 1: | 45 s |
| | Fine Leak Check: | 5 s |
| | Evacuation 2: | 5 s |
| | Filling: | 35 s |
| | Entire evac/fill actuation time | 90 s = 5A Hex |

**The routine is internal limited to a maximum actuation time of 150s (96 Hex). If the tester request is larger than the allowed 150s (96 Hex), the ECU uses the maximum allowed value. It is not allowed to repeat the routine twice within a short time (valves might be damaged by overheating).**

**There is a must before start Evac&Fill routine which is the service of security access, detailed information reference documents of functional description of diagnosis.**



©博世保留商标和专利应用在内的所有权力，未经我公司许可不得复制或传递给第三方。

© All rights with Robert Bosch GmbH, including trademark / patent applications. Any right of disposal, as copying and distribution to third parties is ours.

### 6.2.2 检查抽真空加注程序执行状态(可选) Check E&F routine status(optional)

| 诊断功能：索要程序执行结果 Diagnostic Function: Request Routine Result | |
|---|---|
| Service Identifier: | 31 H |
| Routine Identifier: | 02 H |
| Control Option: | 03 H |

肯定的回复 Positive response

| | |
|---|---|
| Service Positive Response Identifier: | 71 H |
| Routine Identifier: | 02 H |
| ControlStatus | XX H |

控制状态 Supported Control Status:

| 状态 Status: | 数值 Value |
|---|---|
| Control/Routine Started successfully by the tester | 01 H |
| Control/Routine Completed | 02 H |
| Control/Routine in Progress | 03 H |
| Control/Routine Stopped | 04 H |



©博世保留商标和专利应用在内的所有权力，未经我公司许可不得复制或传递给第三方。

© All rights with Robert Bosch GmbH, including trademark / patent applications. Any right of disposal, as copying and distribution to third parties is ours.

## 6.3 人工排气相关通讯指令 Repair bleeding Command

### 6.3.1 人工排气第一阶段指令（左后轮排气）Phase 1: Wheel RL

| 诊断功能：开始执行程序 Diagnostic Function: Start Routine By Local Identifier | |
|---|---|
| Service Identifier: | 31 H |
| Routine Identifier: | 03 H |
| Control Option: | 01 H |
| Repair Bleeding Phase(1..4): | 01 H |
| Repetition Counter(3..5): | 00 H |

### 6.3.2 人工排气第二阶段指令（左前轮排气）Phase 2: Wheel FL

| 诊断功能：开始执行程序 Diagnostic Function: Start Routine By Local Identifier | |
|---|---|
| Service Identifier: | 31 H |
| Routine Identifier: | 03 H |
| Control Option: | 01 H |
| Repair Bleeding Phase(1..4): | 02 H |
| Repetition Counter(3..5): | 00 H |

### 6.3.3 人工排气第三阶段指令（右前轮排气）Phase 3: Wheel FR

| 诊断功能：开始执行程序 Diagnostic Function: Start Routine By Local Identifier | |
|---|---|
| Service Identifier: | 31 H |
| Routine Identifier: | 03 H |
| Control Option: | 01 H |
| Repair Bleeding Phase(1..4): | 03 H |
| Repetition Counter(3..5): | 04 H |



©博世保留商标和专利应用在内的所有权力，未经我公司许可不得复制或传递给第三方。

© All rights with Robert Bosch GmbH, including trademark / patent applications. Any right of disposal, as copying and distribution to third parties is ours.

*** 为达到好的排气效果建议循环次数设置为 4 次。**
*** The recommendation "Repetition Counter" is a number of 4 loops for a good bleeding result.**

### 6.3.4 人工排气第四阶段指令（右后轮排气）Phase 4: Wheel RR

| 诊断功能：开始执行程序 Diagnostic Function: Start Routine By Local Identifier | |
|---|---|
| Service Identifier: | 31 H |
| Routine Identifier: | 03 H |
| Control Option: | 01 H |
| Repair Bleeding Phase(1..4): | 04 H |
| Repetition Counter(3..5): | 04 H |

*** 为达到好的排气效果建议循环次数设置为 4 次。**
*** The recommendation "Repetition Counter" is a number of 4 loops for a good bleeding result.**

通用的肯定的回复 General Positive response

| | |
|---|---|
| Service Positive Response Identifier: | 71 H |
| Control Option: | 03 H |
| Supported Control Status: | 01 H |

控制状态 Supported Control Status:

| 状态 Status: | 数值 Value |
|---|---|
| Control/Routine Started successfully by the tester | 01h |
| Control/Routine completed | 02h |
| Control/Routine in progress | 03h |
| Control/Routine stopped | 04h |
| Control/Routine failure or Routine not run | 05h |



©博世保留商标和专利应用在内的所有权力，未经我公司许可不得复制或传递给第三方。

© All rights with Robert Bosch GmbH, including trademark / patent applications. Any right of disposal, as copying and distribution to third parties is ours.

### 6.3.5 检查人工排气程序执行状态(可选) Check Repair Bleeding routine status(optional)

此项目放在每阶段指令之后，用来检查排气指令结果

| 诊断功能：索要程序执行结果 Diagnostic Function: Request Routine Result | |
|---|---|
| Service Identifier: | 31 H |
| Routine Identifier: | 03 H |
| Control Option: | 03 H |

肯定的回复 Positive response

| | |
|---|---|
| Service Positive Response Identifier: | 71 H |
| Routine Identifier: | 03 H |
| Control Status: | XX H |

控制状态 Supported Control Status:

| 状态 Status: | 数值 Value |
|---|---|
| Control/Routine Started successfully by the tester | 01 H |
| Control/Routine Completed | 02 H |
| Control/Routine in Progress | 03 H |
| Control/Routine Stopped | 04 H |



©博世保留商标和专利应用在内的所有权力，未经我公司许可不得复制或传递给第三方。

© All rights with Robert Bosch GmbH, including trademark / patent applications. Any right of disposal, as copying and distribution to third parties is ours.

# 7 故障处理：Failure Handling:

## 7.1 抽真空加注故障 E&F Failure

| 故障处理：<br>Failure Handling: | |
|---|---|
| 故障类型：<br>Type of failure: | 故障指示，故障处理：<br>Failure Indication , Failure Handling: |
| 抽真空/加注设备<br>Evac/fill equipment<br>诊断设备<br>Diagnostic equipment | 设置故障指示，在车辆上张贴标签→ 修理<br>set failure indication, put tag on the vehicle →Repair<br>设置故障指示，在车辆上张贴标签→ 修理<br>set failure indication, put tag on the vehicle →Repair |

备注：
如果在抽真空/加注流程中所有的诊断功能中出现故障，则标准的抽真空/加注循环仍可以继续执行。但是，抽真空/加注设备必须设置故障信息，以确认系统需要执行修理排气。
如果在抽真空流程中检测到故障，也可能会中断在线抽真空流程（必须保证是干燥的系统）。在这种情况下，可能会离线重复执行第二次完整的抽真空和加注流程。
对使用另外的调节器不包括第二回路对基础制动器油路进行加注。这使整个系统的修理排气变得更加方便。
如果系统出现一般性故障（比如泄漏或者机器故障），则加注将失败，必须中止该循环并且指示该流程故障。为了避免系统出现任何损坏，建议在修理区域进行排气之前切勿操作系统。

Remarks:
In case of failure at all diagnostic functions during the evac/fill process, the standard evac/fill cycle can be continued. But the evac/fill equipment must set a failure message to identify that the system needs to be repair bleed.
In case of a detected failure during the evacuation process it is also possible to interrupt the on line evacuation process (dry system must be guaranteed). In this case it is possible to repeat a complete second evacuation and fill process off line.
The foundation brake circuits will be filled with the exception of the secondary circuits of the modulator. This makes it easier to repair bleed the entire system.
In case of a general failure of the system (i.e. leakage or machine failure) the filling will not be successful and the cycle must be aborted and the process failure must be indicated. In order to avoid any damages of the system, it is recommended not to operate the system until it is bled at the repair area.

## 7.2 人工排气故障 Repair Bleeding Failure

| 故障处理：<br>Failure Handling: | |
|---|---|
| 故障类型：<br>Type of failure: | 故障指示，故障处理：<br>Failure Indication , Failure Handling: |
| 排气设备<br>Bleed unit<br>诊断设备<br>Diagnostic equipment | 更换排气单元 → 再排气流程<br>设置故障指示 → 再排气流程<br>replace bleed unit → repeat repair procedure<br>set failure indication → repeat repair procedure |



©博世保留商标和专利应用在内的所有权力，未经我公司许可不得复制或传递给第三方。

© All rights with Robert Bosch GmbH, including trademark / patent applications. Any right of disposal, as copying and distribution to third parties is ours.

# 8 阀保护措施和液压数据 Valve protective measures and hydraulic data

## 8.1 阀保护措施 Valve protective measures

| | ABS9 | |
|---|---|---|
| **Valve:** | 诊断模式 **Diagnostic mode** | |
| **EV 7,3 Ω** | Evac/fill routine | 未启动 Not activated |
| | Repair bleed routine | Valve actuation time limited by ROM resident routine |
| **AV 7,3 Ω** | Evac/fill routine | Valve actuation time limited by ROM resident routine to **150s (1s on/1 s off)** |
| | Repair bleed routine | Valve actuation time limited by ROM resident routine |

备注：
在诊断模式下，所有阀保护措施都被激活，无法关闭。
Remarks:
All valve protection measurements are active in the diagnostic mode. These measurements can not be switched off.



©博世保留商标和专利应用在内的所有权力，未经我公司许可不得复制或传递给第三方。

© All rights with Robert Bosch GmbH, including trademark / patent applications. Any right of disposal, as copying and distribution to third parties is ours.

## 8.2 液压数据 Hydraulic data

| Hydraulic data 液压数据: | Unit: | ABS 9 |
|---|---|---|
| **Volume of the primary circuit per circuit (per hydraulic unit):**第一回路每条油路容积 | $cm^3$ | **3,5 (7,0)** |
| **Volume of the secondary circuit per circuit (per hydraulic unit):**第二回路每条油路容积 | | **0,8 (1,6)** |
| **Volume of the priming circuit per circuit (per hydraulic unit):**吸入阀回路每条油路容积 | | **---** |
| **Dead space of the pump elements per circuit (per hydraulic unit):**泵单元每条油路盲区 | | **0,2 (0,4)** |
| **Inlet valve orifice diameter RA:**后轴进液阀孔径 | mm | **Ø 0.45** |
| **Inlet valve orifice diameter FA:**前轴进液阀孔径 | | **Ø 0.7** |
| **Outlet valve orifice diameter RA:** 后轴出液阀孔径 | | **Ø 0.51** |
| **Outlet valve orifice diameter FA:** 前轴出液阀孔径 | | **Ø 1.2** |
| **Maximal Pump element dry run time $t_{PEdry}$ :**泵单元最长干转时间 $t_{PEdry}$ | s | **≤ 60** |

备注：
所有上述容积数据都是圆整值。
抽真空加注的时间取决于进液阀孔径，孔径大小请参考具体项目/客户规范。

Remarks:
All mentioned volume data are rounded values.
The evacuation and filling time depends on the used inlet valve orifice diameter. The used orifices are project and customer specific.



©博世保留商标和专利应用在内的所有权力，未经我公司许可不得复制或传递给第三方。

© All rights with Robert Bosch GmbH, including trademark / patent applications. Any right of disposal, as copying and distribution to third parties is ours.

# 9 电气数据规格 Electrical Data Specifications:

## 9.1 ABS 系统的电流消耗计算值 Information to the calculated current consumption of an ABS system

| Calculated current consumption at a 12V voltage supply 12V 电压电源下的电流消耗值 | | | |
|---|---|---|---|
| **Component:** | **Physical value:** | **Unit:** | **Remarks:** |
| **ECU:** | **≤ 0,5** | **A** | |
| **AV coil (7,3 Ω):**<br>出液阀线圈 | **1,64** | **A** | |
| **PM start up current $I_{on}$**<br>泵马达启动电流 | **≤ 145** | **A** | **Depending on the used pump motor.**<br>由所用泵马达型号决定 |
| **PM start up current time $t_{on}$**<br>泵马达启动电流持续时间 | **≤ 20** | **ms** | |
| **PM constant current $I_{on_const}$** 泵马达稳定电流 | **≤ 15** | **A** | |

## 9.2 电压规格 Specification of the voltage supply

| Specification voltage supply | | |
|---|---|---|
| **Parameter:** | **Physical value:** | **Remarks:** |
| **Range of voltage [V]:**<br>电压范围 | **11,5 ≤ power supply unit ≤ 14** | **Allowed voltage range measured at the ECU. It must be guaranteed that the voltage never drops below 10V (e.g. buffering of the voltage with a condenser required)!**<br>电压允许范围在 **ECU** 处测得。电压必须保证不低于 **10V**（例如使用电容器作为电压缓冲器） |
| **Current [A]:**电流 | **≥ 100** | **With pump motor activation.**泵马达启动 |
| | **≥ 20** | **Without pump motor activation.**泵马达不启动 |

备注: Remarks:
抽真空加注设备及其电源供应必须满足上述要求。
电源与 ABS ECU 之间线束长度可能引起一定的电压降，但对以上规定的电气数据不构成影响。
The evacuation and filling equipment respectively its power supply hast to meet the above described requirements. Independent of the length of the wires between the power supply and the ABS ECU and the possible caused voltage drop the specified electrical values must be kept.



©博世保留商标和专利应用在内的所有权力，未经我公司许可不得复制或传递给第三方。

© All rights with Robert Bosch GmbH, including trademark / patent applications. Any right of disposal, as copying and distribution to third parties is ours.

# 10 电气连接 Electrical Adaptation:

## 10.1 抽真空加注电气连接 E&F Electrical Adaptation

对于系统电气连接，共有两种不同的可能操作。
There are two different possibilities for the electrical adaptation onto the system.

### 10.1.1 连接车辆的诊断口 Adaptation onto the diagnostic link of the vehicle:

Bosch 建议使用 Recommended from Bosch

| 处理 Handling | |
|---|---|
| 操作员<br>Operator | 备注：<br>Remarks: |
| ☞ 连接诊断连接<br>Adapt diagnostic link<br>☞ 连接电源（如果必要）<br>Adapt power supply (if necessary) | 在仪表板或者发动机舱中<br>either in dashboard or engine compartment<br>外部电源（如必要：与外部汽车电池连接）被需要或者为支持车辆蓄电池或者在没有安装或连接蓄电池条件（可选）下。<br>external power supply (if necessary: in connection with a external car battery) is required either to support the vehicle battery or in case the battery is not already installed or connected (optional) |
| ☞ 连接点火开关<br>Turn Ignition ON | 接通系统电源并初始化电子控制单元。<br>to power up the system and initialize the ECU. |

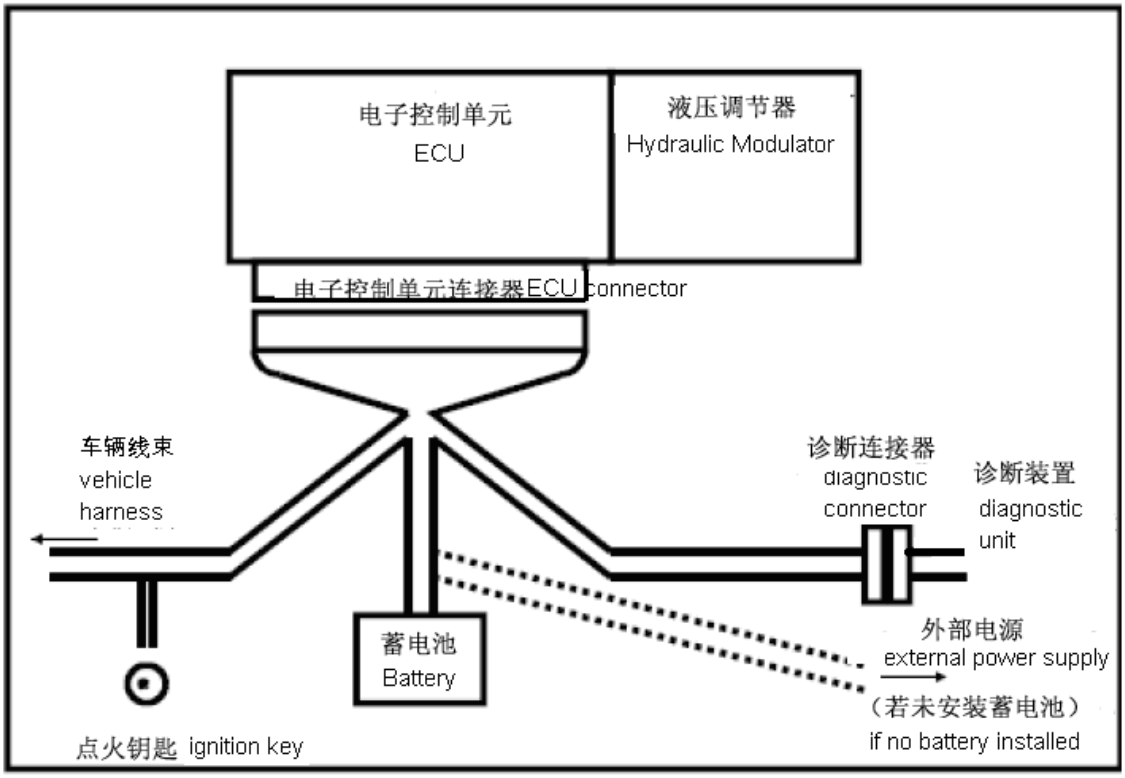




©博世保留商标和专利应用在内的所有权力，未经我公司许可不得复制或传递给第三方。

© All rights with Robert Bosch GmbH, including trademark / patent applications. Any right of disposal, as copying and distribution to third parties is ours.

### 10.1.2 连接电子控制单元连接器：Adaptation onto the ECU connector:

| 处理 Handling | |
|---|---|
| 操作员 Operator | 备注：Remarks: |
| ☞ 连接电子控制单元上的连接器<br>Adapt connector onto the ECU<br>ABS 连接器（38 针脚）：<br>ABS Connector (38- PIN):<br>需要的针脚 Terminals required:<br>1. 电子控制单元供电针脚（第28号针脚）<br>power supply to the ECU (PIN 28)<br>2. 泵电机供电针脚（第1号针脚）<br>power supply to the pump motor (PIN 1)<br>3. 阀供电针脚（第25号针脚）<br>power supply to the valves (PIN 25)<br>4. 电子控制单元接地连接针脚（第38号针脚）<br>ground connection of the ECU (PIN 38)<br>5. 泵电机接地连接针脚（第 13 号针脚）<br>ground connection of the pump motor (PIN 13)<br>6.K 诊断脚（第6号针脚）<br>K line connection(PIN 6): | 需要方便地检修电子控制单元连接器。<br>A good access to the ECU connector is required.<br>在连接器端子中包含了外部电源和诊断连接接头。<br>The external power supply and the diagnostic link are included in the connector terminals. |

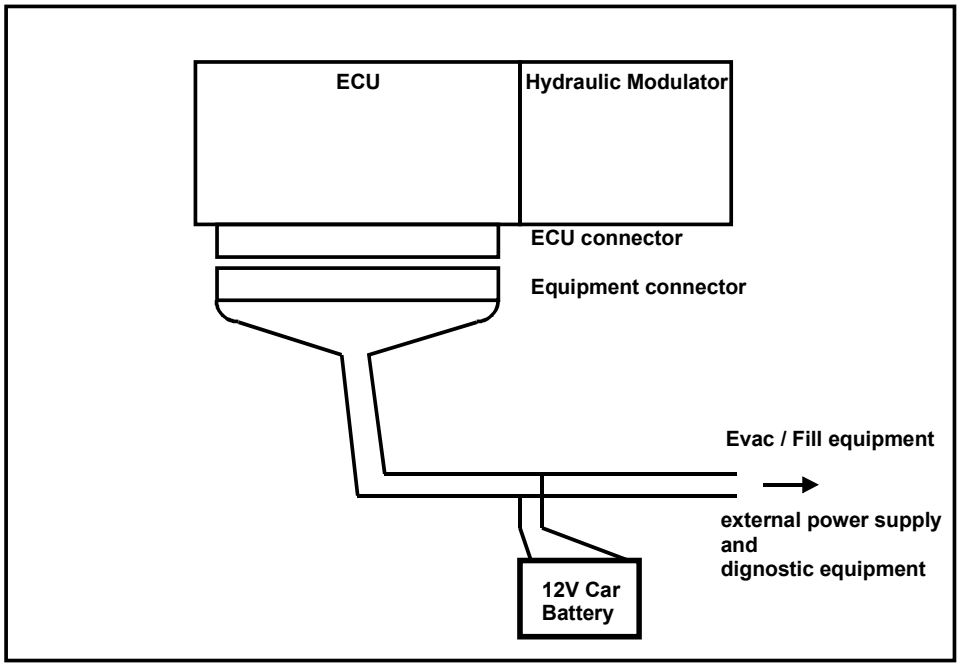




©博世保留商标和专利应用在内的所有权力，未经我公司许可不得复制或传递给第三方。

© All rights with Robert Bosch GmbH, including trademark / patent applications. Any right of disposal, as copying and distribution to third parties is ours.

**Notes 注意:**

To avoid damages at the ECU caused by an electrical overstress (EOS) following rules have to be considered
为了避免电冲击损坏 ECU 须注意以下几点:

- It is never allowed to disconnect the ECU connector while a valve or pump motor actuation is running! 阀或泵马达启动时不能拆除 ECU 连接器。
- The external power supply has to be completely switched off before the ECU connector is connected respectively disconnected!连接或拆除 ECU 连接器时必须关闭外接电源！
- During the electrical connection process the ground terminals of the ECU connector have to contact the ground pins before the power pins within the ECU. This can be guaranteed if there is a contact gap (s1) between the ground and the power terminals within the industrial ECU connector. For more details please refer the sectional drawing (A-A) below.在电气连接过程中，ECU 连接器的接地端应当先接触 ECU 的地线针脚，而后连接器的电源端才接触 ECU 的电源针脚。为了保证这一点，在工业型 ECU 连接器的接地端与电源端之间设计了一个触点间隙（s1）。更多详情请参考下列 A-A 断面图。

**Example of a 38 pin industrial ECU connector:**

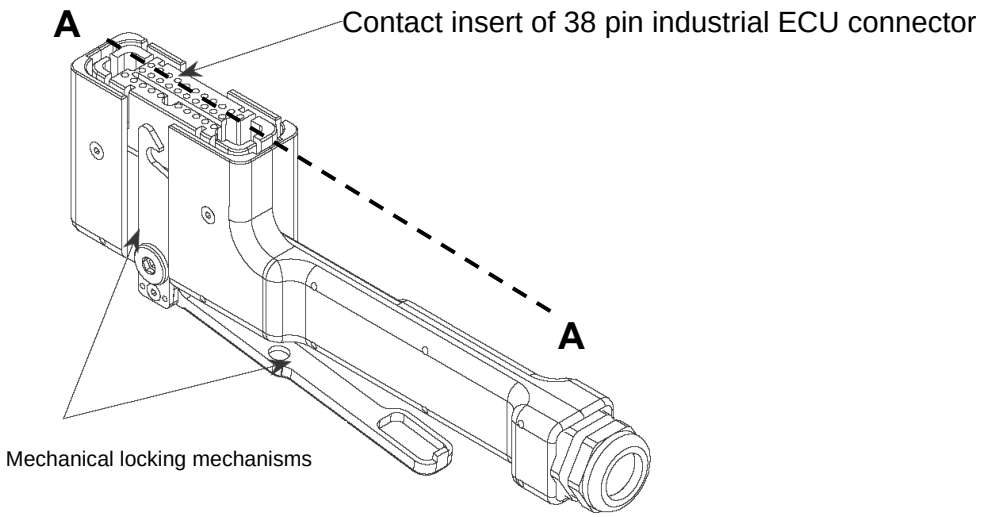


**Sectional drawing (A-A) of a 38 pin industrial ECU connector:工业型 ECU 连接器 A-A 断面图**

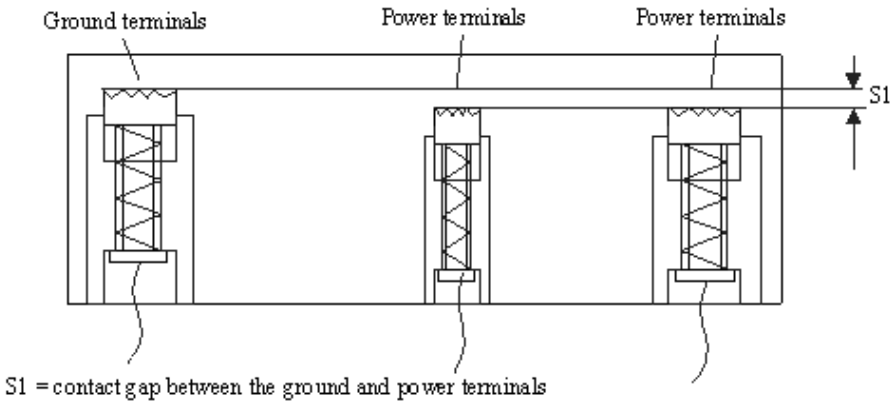




©博世保留商标和专利应用在内的所有权力，未经我公司许可不得复制或传递给第三方。

© All rights with Robert Bosch GmbH, including trademark / patent applications. Any right of disposal, as copying and distribution to third parties is ours.

## 10.2 人工排气电气连接 Repair Bleeding Electrical Adaptation

连接车辆的诊断口 Adaptation onto the diagnostic link of the vehicle:

| 处理 Handling | |
|---|---|
| 操作员 Operator | 备注：Remarks: |
| ☞ 连接诊断连接<br>Adapt diagnostic link<br>☞ 连接电源（如果必要）<br>Adapt power supply (if necessary)<br><br>☞ 连接点火开关<br>Turn Ignition ON | 在仪表板或者发动机舱中<br>either in dashboard or engine compartment<br>外部电源（如必要：与外部汽车电池连接）被需要或者为支持车辆蓄电池或者在没有安装或连接蓄电池条件（可选）下。<br>external power supply (if necessary: in connection with a external car battery) is required either to support the vehicle battery or in case the battery is not already installed or connected (optional)<br>接通系统电源并初始化电子控制单元。<br>to power up the system and initialize the ECU. |

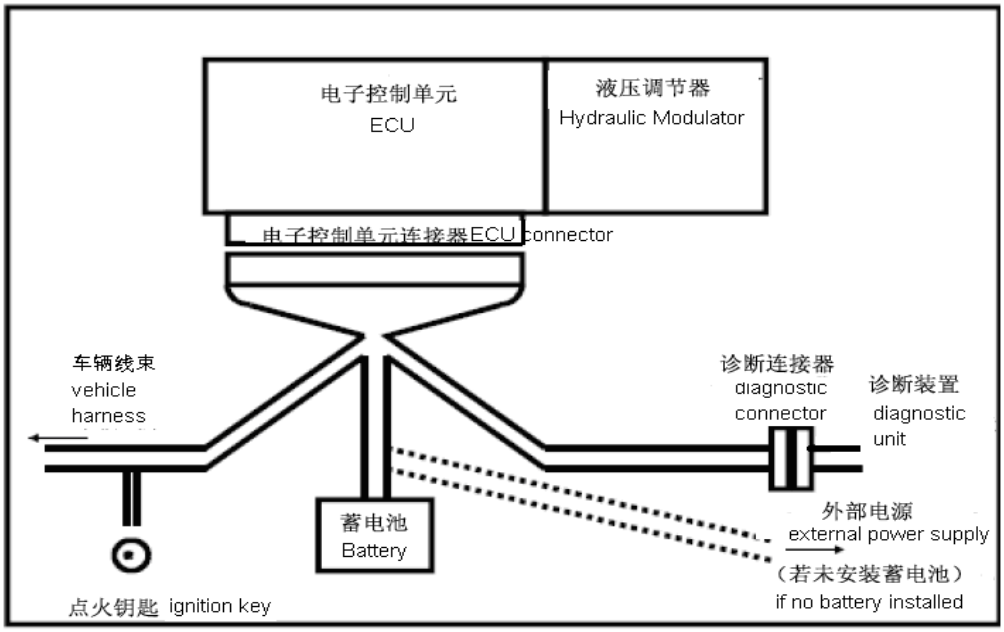




©博世保留商标和专利应用在内的所有权力，未经我公司许可不得复制或传递给第三方。

© All rights with Robert Bosch GmbH, including trademark / patent applications. Any right of disposal, as copying and distribution to third parties is ours.

# 11 附件 Attachments

## 11.1 ABS X 型回路液压图 ABS with X brake split circuit Hydraulic Circuit Diagrams

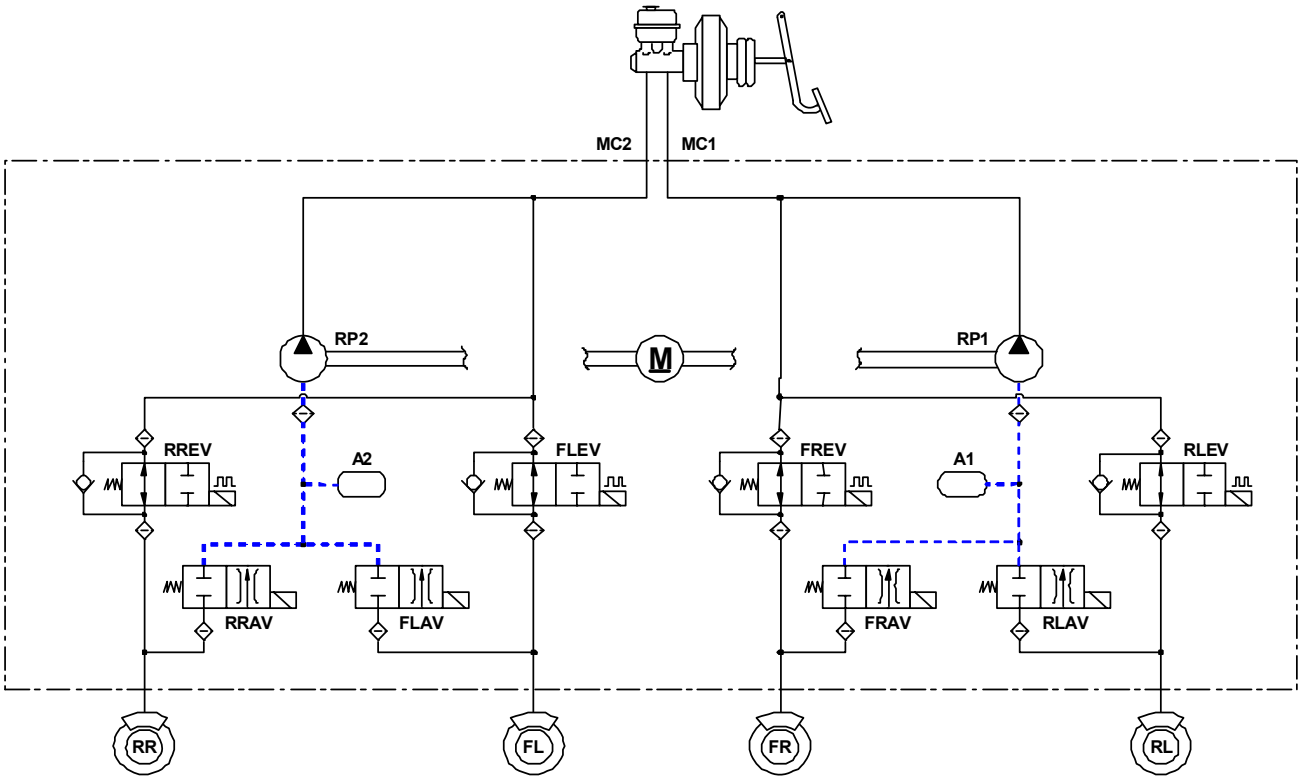


备注：图中虚线部分为第二回路，其他部分为第一回路。
Remarks: Secondary circuit are marked with dash line in diagrams, the others are all primary circuit.



©博世保留商标和专利应用在内的所有权力，未经我公司许可不得复制或传递给第三方。

© All rights with Robert Bosch GmbH, including trademark / patent applications. Any right of disposal, as copying and distribution to third parties is ours.

## 11.2 M150 ABS9 电路图 M150 ABS9 Wiring Diagram

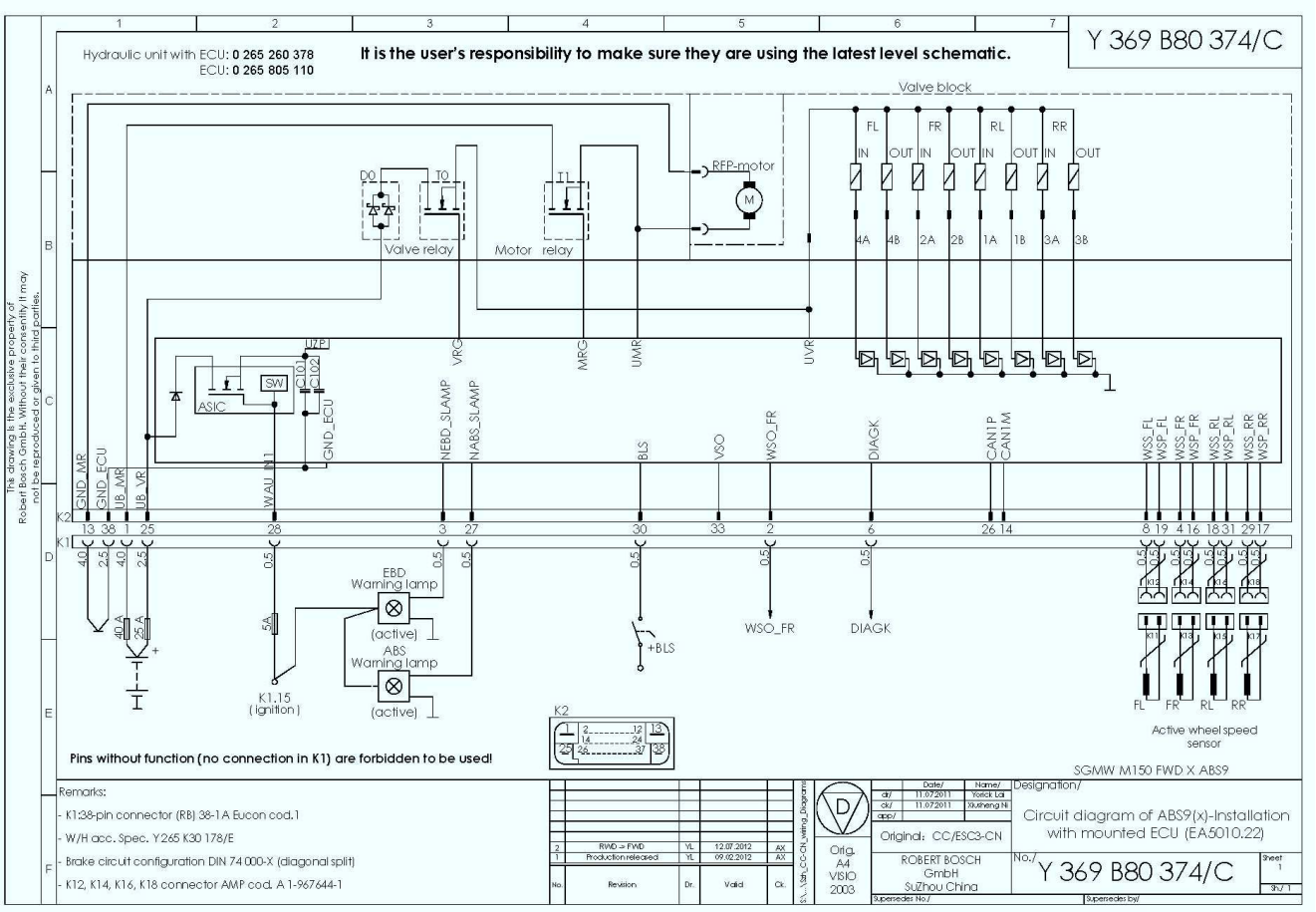




©博世保留商标和专利应用在内的所有权力，未经我公司许可不得复制或传递给第三方。

© All rights with Robert Bosch GmbH, including trademark / patent applications. Any right of disposal, as copying and distribution to third parties is ours.

## 11.3 M150 ABS9 模块 M150 ABS9 Module

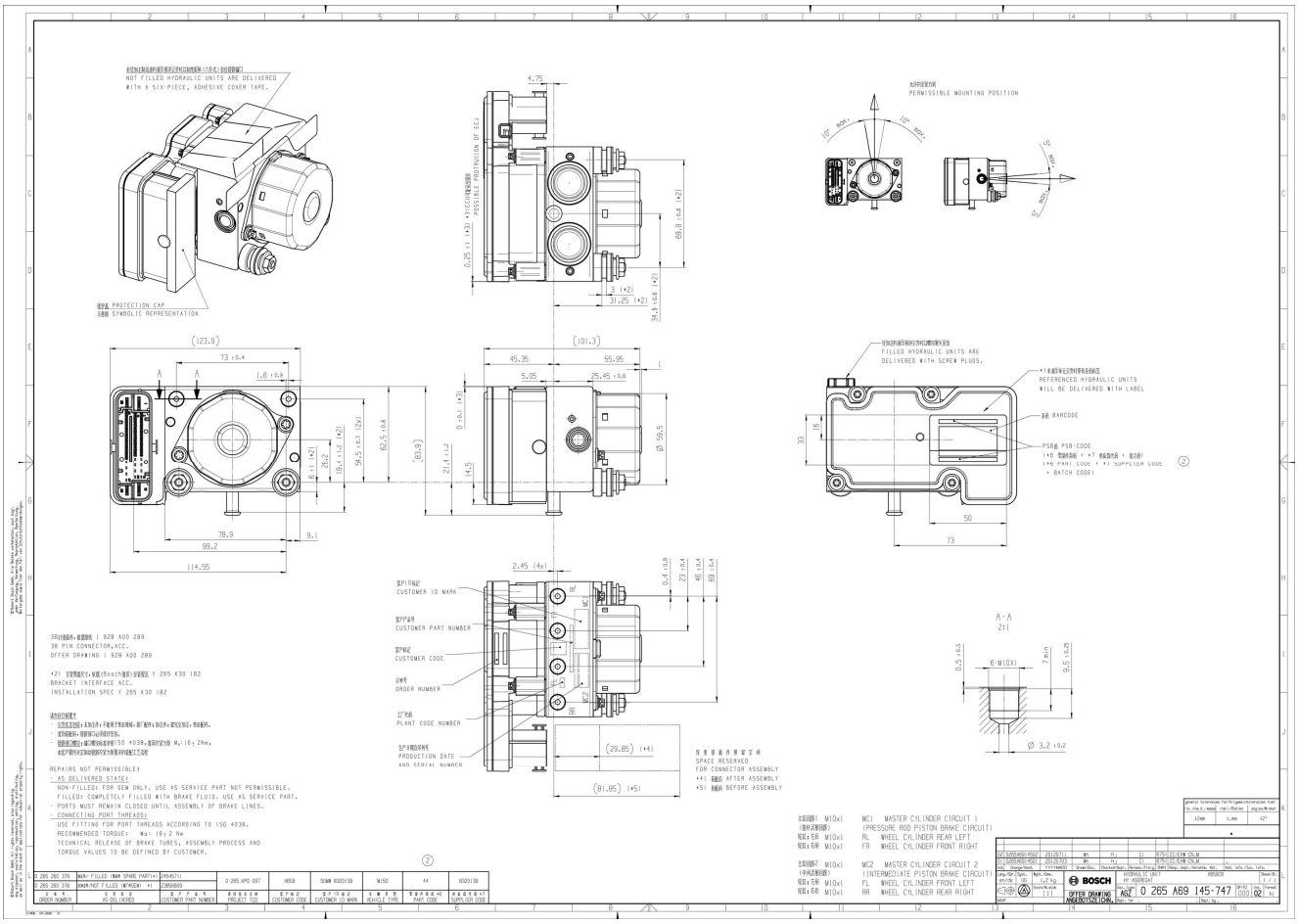



©博世保留商标和专利应用在内的所有权力，未经我公司许可不得复制或传递给第三方。

© All rights with Robert Bosch GmbH, including trademark / patent applications. Any right of disposal, as copying and distribution to third parties is ours.